sound.vision.soul

Service Manual

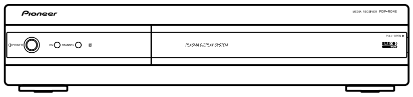

PDP-R04E

ORDER NO.
ARP3179

MEDIA RECEIVER

PDP-R04E

THIS MANUAL IS APPLICABLE TO THE FOLLOWING MODEL(S) AND TYPE(S).

Model	Type	Power Requirement	Remarks
PDP-R04E	WYVI6	AC220-240V	
PDP-R04E	WYVI6XK	AC220-240V	

For details, refer to "Important symbols for good services".

Confirm it

Serial No.
○○ **WYVI6** : □□**SS**######△△
○○ **WYVI6XK** : □□**UK**######△△

PIONEER CORPORATION 4-1, Meguro 1-chome, Meguro-ku, Tokyo 153-8654, Japan
PIONEER ELECTRONICS (USA) INC. P.O. Box 1760, Long Beach, CA 90801-1760, U.S.A.
PIONEER EUROPE NV Haven 1087, Keetberglaan 1, 9120 Melsele, Belgium
PIONEER ELECTRONICS ASIACENTRE PTE. LTD. 253 Alexandra Road, #04-01, Singapore 159936

©PIONEER CORPORATION 2003

T-ZZK NOV. 2003 printed in Japan

SAFETY INFORMATION

This service manual is intended for qualified service technicians; it is not meant for the casual do-it-yourselfer. Qualified technicians have the necessary test equipment and tools, and have been trained to properly and safely repair complex products such as those covered by this manual. Improperly performed repairs can adversely affect the safety and reliability of the product and may void the warranty. If you are not qualified to perform the repair of this product properly and safely, you should not risk trying to do so and refer the repair to a qualified service technician.

WARNING
This product contains lead in solder and certain electrical parts contain chemicals which are known to the state of California to cause cancer, birth defects or other reproductive harm.

Health & Safety Code Section 25249.6 – Proposition 65

NOTICE
(FOR CANADIAN MODEL ONLY)
Fuse symbols (fast operating fuse) and/or (slow operating fuse) on PCB indicate that replacement parts must be of identical designation.

REMARQUE
(POUR MODÈLE CANADIEN SEULEMENT)
Les symboles de fusible (fusible de type rapide) et/ou (fusible de type lent) sur CCI indiquent que les pièces de remplacement doivent avoir la même désignation.

(FOR USA MODEL ONLY)

1. SAFETY PRECAUTIONS

The following check should be performed for the continued protection of the customer and service technician.

LEAKAGE CURRENT CHECK

Measure leakage current to a known earth ground (water pipe, conduit, etc.) by connecting a leakage current tester such as Simpson Model 229-2 or equivalent between the earth ground and all exposed metal parts of the appliance (input/output terminals, screwheads, metal overlays, control shaft, etc.). Plug the AC line cord of the appliance directly into a 120V AC 60 Hz outlet and turn the AC power switch on. Any current measured must not exceed 0.5 mA.

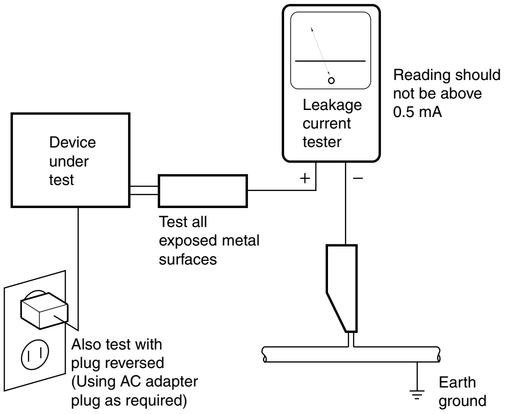
Leakage current tester
Reading should not be above 0.5 mA
+
–
Device under test
Test all exposed metal surfaces
Also test with plug reversed (Using AC adapter plug as required)
Earth ground

AC Leakage Test

ANY MEASUREMENTS NOT WITHIN THE LIMITS OUTLINED ABOVE ARE INDICATIVE OF A POTENTIAL SHOCK HAZARD AND MUST BE CORRECTED BEFORE RETURNING THE APPLIANCE TO THE CUSTOMER.

2. PRODUCT SAFETY NOTICE

Many electrical and mechanical parts in the appliance have special safety related characteristics. These are often not evident from visual inspection nor the protection afforded by them necessarily can be obtained by using replacement components rated for voltage, wattage, etc. Replacement parts which have these special safety characteristics are identified in this Service Manual.

Electrical components having such features are identified by marking with a ⚠ on the schematics and on the parts list in this Service Manual.
The use of a substitute replacement component which does not have the same safety characteristics as the PIONEER recommended replacement one, shown in the parts list in this Service Manual, may create shock, fire, or other hazards.

Product Safety is continuously under review and new instructions are issued from time to time. For the latest information, always consult the current PIONEER Service Manual. A subscription to, or additional copies of, PIONEER Service Manual may be obtained at a nominal charge from PIONEER.

[Important symbols for good services]

In this manual, the symbols shown-below indicate that adjustments, settings or cleaning should be made securely.
When you find the procedures bearing any of the symbols, be sure to fulfill them:

1. Product safety

You should conform to the regulations governing the product (safety, radio and noise, and other regulations), and should keep the safety during servicing by following the safety instructions described in this manual.

2. Adjustments

To keep the original performances of the product, optimum adjustments or specification confirmation is indispensable. In accordance with the procedures or instructions described in this manual, adjustments should be performed.

3. Cleaning

For optical pickups, tape-deck heads, lenses and mirrors used in projection monitors, and other parts requiring cleaning, proper cleaning should be performed to restore their performances.

4. Shipping mode and shipping screws

To protect the product from damages or failures that may be caused during transit, the shipping mode should be set or the shipping screws should be installed before shipping out in accordance with this manual, if necessary.

5. Lubricants, glues, and replacement parts

Appropriately applying grease or glue can maintain the product performances. But improper lubrication or applying glue may lead to failures or troubles in the product. By following the instructions in this manual, be sure to apply the prescribed grease or glue to proper portions by the appropriate amount.For replacement parts or tools, the prescribed ones should be used.

CONTENTS

SAFETY INFORMATION 2
1. SPECIFICATIONS 5
2. EXPLODED VIEWS AND PARTS LIST 6
  2.1 PACKING 6
  2.2 EXTERIOR SECTION 8
  2.3 FRONT SECTION 10
3. BLOCK DIAGRAM AND SCHEMATIC DIAGRAM 12
  3.1 BLOCK DIAGRAM AND SCHEMATIC DIAGRAM 12
    3.1.1 SIGNAL ROUTE 12
    3.1.2 MR MAIN BOARD ASSY 14
    3.1.3 AV BOARD ASSY 16
    3.1.4 POWER SUPPLY UNIT 18
    3.1.5 PC CARD MODULE 19
  3.2 OVERALL WIRING DIAGRAM 20
  3.3 MR MAIN BOARD ASSY (1/13) 22
  3.4 MR MAIN BOARD ASSY (2/13) 24
  3.5 MR MAIN BOARD ASSY (3/13) 26
  3.6 MR MAIN BOARD ASSY (4/13) 28
  3.7 MR MAIN BOARD ASSY (5/13) 30
  3.8 MR MAIN BOARD ASSY (6/13) 32
  3.9 MR MAIN BOARD ASSY (7/13) 34
  3.10 MR MAIN BOARD ASSY (8/13) 36
  3.11 MR MAIN BOARD ASSY (9/13) 38
  3.12 MR MAIN BOARD ASSY (10/13) 40
  3.13 MR MAIN BOARD ASSY (11/13) 42
  3.14 MR MAIN BOARD ASSY (12/13) 44
  3.15 MR MAIN BOARD ASSY (13/13) 46
  3.16 AV BOARD ASSY (1/8) 48
  3.17 AV BOARD ASSY (2/8) 50
  3.18 AV BOARD ASSY (3/8) 52
  3.19 AV BOARD ASSY (4/8) 54
  3.20 AV BOARD ASSY (5/8) 56
  3.21 AV BOARD ASSY (6/8) 58
  3.22 AV BOARD ASSY (7/8) 60
  3.23 AV BOARD ASSY (8/8) 62
  3.24 MDR ASSY 64
  3.25 SR ASSY 66
  3.26 FRONT ASSY (1/2) 68
  3.27 FRONT ASSY (2/2) 70
  3.28 LED ASSY 71
  3.29 REG ASSY 72
  3.30 AC SW ASSY and POWER SUPPLY UNIT 74
  3.31 WAVEFORMS 76
  3.32 VOLTAGES 77
4. PCB CONNECTION DIAGRAM 80
  4.1 AC SW and MDR ASSYS 80
  4.2 REG ASSY 81
  4.3 MR MAIN BOARD ASSY 82
  4.4 AV BOARD and SR ASSYS 86
  4.5 FRONT and LED ASSY 90
5. PCB PARTS LIST 92
6. ADJUSTMENT 100
  6.1 HOW TO ENTER SERVICE FACTORY MODE 100
  6.2 POSSIBLE CASES WHERE READJUSTMENT IS REQUIRED 100
  6.3 USING RS-232C COMMANDS 101
  6.4 ADJUSTMENT ITEMS 102
  6.5 TRAP SWITCH 105
  6.6 SERVICING USING ONLY THE MEDIA RECEIVER 106
  6.7 SERVICE FACTORY MODE 107
  6.8 LIST OF RS-232C COMMANDS 121
  6.9 OUTLINE OF COMMANDS 124
7. GENERAL INFORMATION 129
  7.1 DIAGNOSIS 129
    7.1.1 TROUBLE SHOOTING 129
    7.1.2 DISASSEMBLY 140
  7.2 EXPLANATION 142
    7.2.1 PROCESSING IN ABNORMALITY (TRAP SW) 142
    7.2.2 PROCESSING IN ABNORMALITY 143
  7.3 PARTS 146
    7.3.1 IC 146
  7.4 CLEANING 180
8. PANEL FACILITIES 181

1. SPECIFICATIONS

Item			Media Receiver, Model: PDP-R04E
Colour System			PAL/SECAM/NTSC 3.58/NTSC 4.43/PAL 60
TV Function	Receiving System		B/G, D/K, I, L/L’
	Tuner	VHF/UHF	E2–E69ch, F2–F10ch, I21–I69ch, IR A–IR Jch
		CATV	Hyper-band, S1–S41ch
	Auto Channel Preset		99 ch, Auto Preset, Auto Label, Auto Sort
	STEREO		NICAM/A2
Terminals	Rear	INPUT 1	SCART (AV in, RGB in, TV out)
		INPUT 2	SCART (AV in/out, S-VIDEO in, AV link*1)
		INPUT 3	SCART (AV in/out, S-VIDEO in, RGB in, AV link*1), Component Video in, HDMI in
		Antenna	75 Ω Din Type for VHF/UHF in
	Front	INPUT 4	S-VIDEO, AV in
		PC	15 Pin mini D-Sub, Audio in
MONITOR OUTPUT Terminal		(Rear)	S-VIDEO out, AV out
SUB WOOFER OUTPUT Terminal		(Rear)	Variable
PHONES OUTPUT Terminal		(Front)	16–32 Ω recommended
Power Requirement			220–240 V AC , 50/60 Hz, 38 W (0.4 W Standby)
Dimensions			420 (W) × 90 (H) × 297 (D) mm
Weight			5.0 kg

- accessories

Power cord (2 m)

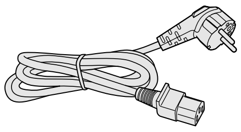

(For Europe, except U.K. and Eire)
(ADG1214)

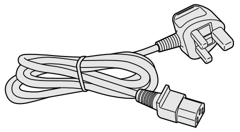

(For U.K. and Eire)

Only the power code that is appropriate in your country or region is supplied.

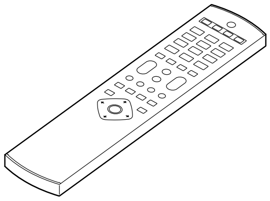

Remote control unit
(AXD1481)

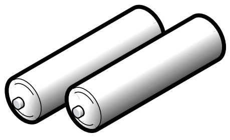

AA size battery x 2
(Manganese battery)

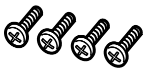

Screw x 4 (PMB40P120FZK)
(for stand)

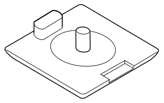

Screw hole cap x 4
(AMR3363)

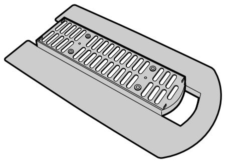

Stand (AXG1013)

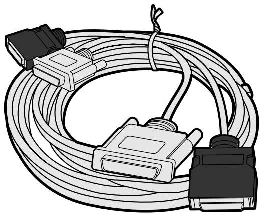

System cable (3 m) (ADF1021)

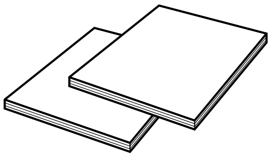

Two operating instructions

2. EXPLODED VIEWS AND PARTS LIST

NOTES:
- *Parts marked by "NSP" are generally unavailable because they are not in our Master Spare Parts List.*
- *The ⚠ mark found on some component parts indicates the importance of the safety factor of the part. Therefore, when replacing, be sure to use parts of identical designation.*
- *Screws adjacent to ▼ mark on product are used for disassembly.*
- *For the applying amount of lubricants or glue, follow the instructions in this manual. (In the case of no amount instructions, apply as you think it appropriate.)*

2.1 PACKING

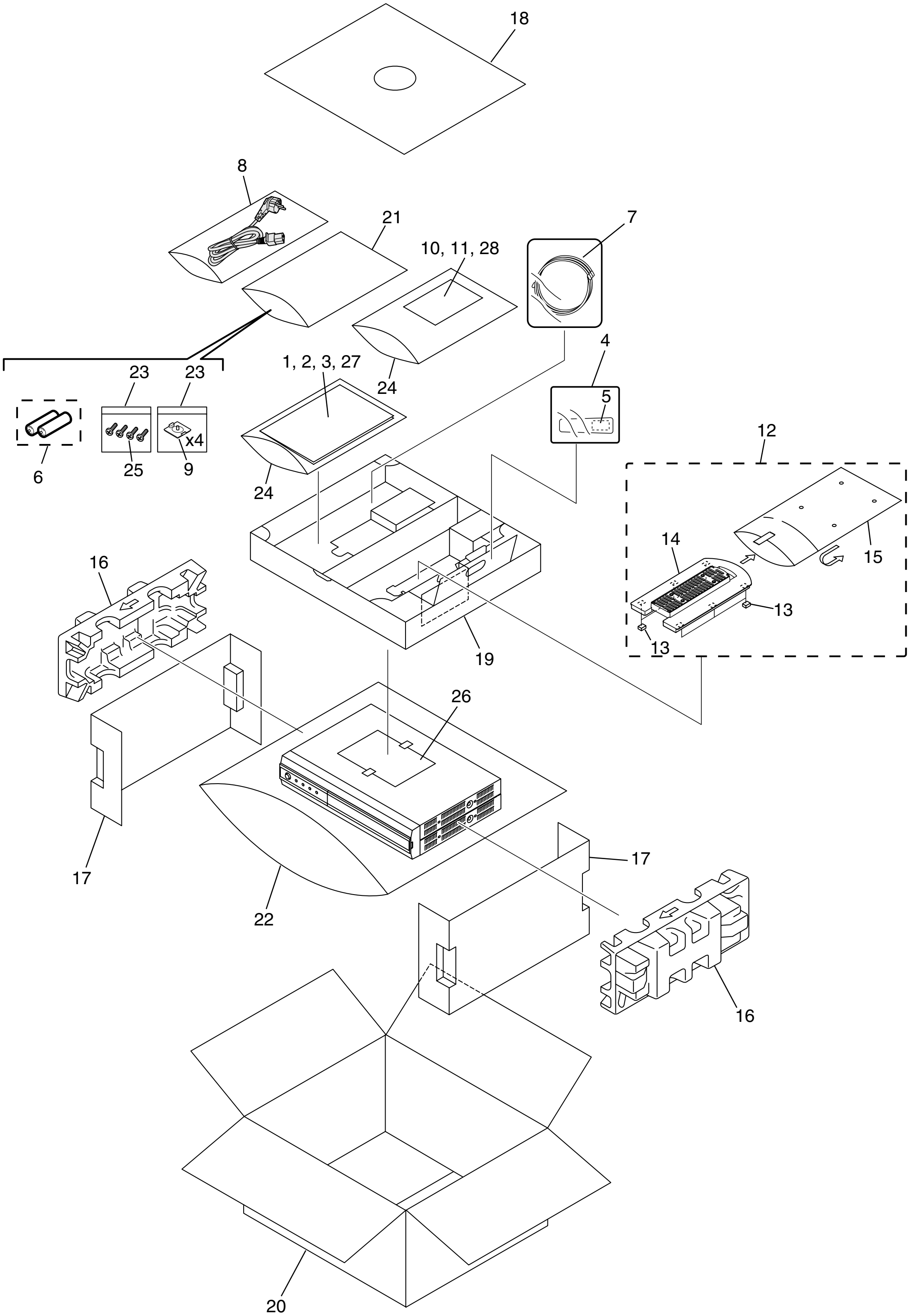
18
8
21
10, 11, 28
7
4
5
1, 2, 3, 27
23
23
24
24
6
25
9
x4
12
14
15
13
13
16
19
26
17
17
22
16
20

PACKING parts List

Mark	No.	Description	Part No.
	1	Operating Instructions (English/French/Spanish)	ARE1368
	2	Operating Instructions (Italian/Dutch/Swedish/Spanish)	ARC1520
	3	Operating Instructions about HDMI (English/French/Spanish/ Italian/Dutch/Swedish/Spanish)	ARE1375
	4	Remote Control Unit	AXD1481
	5	Battery Cover	AZN7919
NSP	6	Battery (R6P/AA) (2P)	AEX1026
⚠	7	System-cable (3m)	ADF1021
⚠	8	Power Cord	ADG1214
	9	Screw Hole Cap	AMR3363
	10	User Card A	ARY1139
	11	User Card B	ARY1140
	12	Stand Assy	AXG1013
NSP	13	Stand Cushion	AEB1390
NSP	14	Stand	AMR3352
	15	Laminated Sheet Bag	AHG1334
	16	Protector	AHA2305
	17	Cardboard Spacer	AHB1246
	18	Top Pad	AHB1247
	19	Accessory Box	AHC1051
	20	Carton E	See Contrast table(2)
NSP	21	Literature Bag	AHG1303
	22	Laminated Sheet Bag	AHG1332
	23	Vinyl Bag	AHG1337
	24	Vinyl Bag	AHG1340
	25	Screw	PMB40P120FZK
	26	Caution Card (10L)	ARM1234
	27	Caution Card	ARM1223
	28	User Card C	ARY1142

(2) CONTRAST TABLE

PDP-R04E/WYVI6 and PDP-R04E/WYVI6XK are constructed the same except for the following:

Mark	NO	Symbol and Description	PDP-R04E/ WYVI6	PDP-R04E/ WYVI6XK
	20	Carton E	AHD3171	AHD3231

2.2 EXTERIOR SECTION

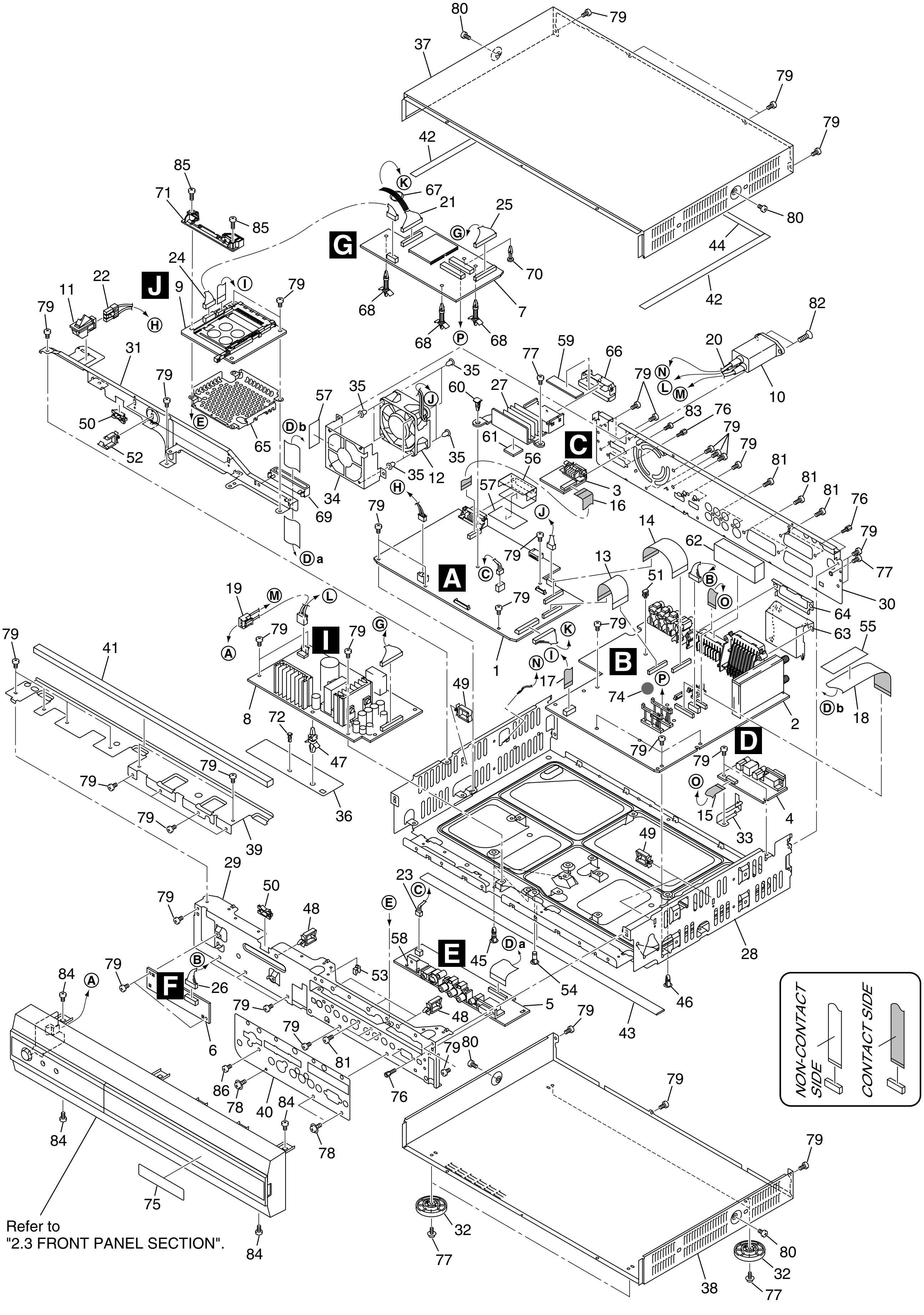
80
79
37
79
79
42
85
71
85
K
67
21
25
G
G
70
80
44
42
24
J
9
I
79
11
22
79
H
68
7
82
68
P
68
20
59
77
66
31
79
35
35
N
L
M
10
57
J
60
27
79
83
76
50
E
65
Db
12
61
C
79
79
52
35
35
56
81
34
69
57
3
81
H
16
81
76
79
J
14
79
C
79
13
62
79
Da
A
51
B
77
19
M
L
79
O
30
64
79
G
79
K
63
55
41
79
I
A
I
N
B
8
49
17
P
74
Db
18
72
2
47
79
D
79
79
O
36
15
33
4
79
39
49
29
23
50
C
48
79
E
58
E
Da
45
B
28
79
53
54
84
A
26
46
F
79
48
43
5
79
6
79
81
79
80
86
76
78
79
40
84
84
78
79
75
32
80
77
32
38
77
84
NON-CONTACT SIDE
CONTACT SIDE

Refer to
"2.3 FRONT PANEL SECTION".

EXTERIOR SECTION parts List

Mark	No.	Description	Part No.
	1	MR MAIN BOARD Assy	AWV2041
	2	AV BOARD Assy	AWZ6813
	3	MDR Assy	AWZ6778
	4	SR Assy	AWZ6817
	5	FRONT Assy	AWZ6832
	6	LED Assy	AWZ6816
	7	REG Assy	AWZ6814
⚠	8	POWER SUPPLY Unit	AXY1065
⚠	9	PC Card Module	AXY1073
⚠	10	AC INLET (CN1)	AKP1249
	11	TRAP Switch	ASG1089
	12	Fan Motor 60 x 25L	AXM1041
	13	Flexible Cable (J202)	ADD1209
	14	Flexible Cable (J203)	ADD1210
	15	Flexible Cable (J206)	ADD1213
	16	Flexible Cable (J207)	ADD1214
	17	Flexible Cable (J208)	ADD1226
	18	Flexible Cable (J205)	ADD1245
	19	Wire Harness (J103)	ADX2831
	20	Earth Wire (J104)	ADX2832
	21	15P Housing Wire (J105)	ADX2833
	22	3P Housing Wire (J107)	ADX2836
	23	3P Housing Wire (J108)	ADX2837
	24	6P Housing Wire (J111)	ADX2852
	25	16P Housing Wire (J112)	ADX2859
	26	7P Housing Wire (J113)	ADX2860
	27	Heatsink HDMI	ANH1618
	28	Base Chassis	ANA1771
	29	Front Chassis E	ANB1864
	30	Terminal Panel E	See Contrast table(2)
	31	Center Stay	ANG2564
	32	Leg Assy	AXG1012
	33	SR Holder E	ANG2581
	34	Fan Holder	ANG2568
	35	Insulation Rubber	AEB1377
	36	Barrier A	AEC1936
	37	Metal Bonnet Top	ANE1615
	38	Metal Bonnet Bottom	ANE1616
⚠	39	Front Shield A	ANG2615
⚠	40	Front Shield C E	ANG2640
⚠	41	Gasket A	ANK1717
⚠	42	Gasket B	ANK1718
⚠	43	Gasket C	ANK1719
⚠	44	Gasket D	ANK1720
	45	PCB Holder	AEC1097
	46	Spacer	AEC1256
	47	Locking Card Spacer	AEC1429
	48	Wire Saddle	AEC1745
	49	Reuse Wire Saddle	AEC1945
	50	Edge Saddle	AEC1946
	51	Mini Card Spacer	AEC1959
	52	Reuse Clamp	AEC1963
	53	Mini Clamp	AEC1971
	54	Card Spacer A	BEC1120
	55	FFC Cushion	AEB1395
⚠	56	DVI Shield S	ANG2639
	57	DVI Cushion	AEB1396
	58	Front Earth Plate	ANG2657
⚠	59	Gasket F	ANK1722
	60	Circuit Board Spacer	AEC1964
	61	Silicon Sheet HDMI	AEB1379
⚠	62	Scart Shield S	ANG2636
⚠	63	Scart Shield W	ANG2643
⚠	64	Shield Plate SF	ANG2649
⚠	65	PC Shield	ANG2578
⚠	66	HDMI Shield	ANG2646
	67	HL28	AEC1982
	68	Circuit Board Spacer	AEC1960
	69	Clamp	AEC1884
	70	Mini Card Spacer	AEC1983
	71	PC Guide	AMR3393
	72	Nyron Rivet	AEC1671
	73	••••••	
	74	Label (BLUE 16)	AAX2787
	75	Eye Catching Label	AAX3011
	76	Hexagonal Head Screw	BBA1051
	77	Screw	ABZ30P080FZK
	78	Screw	BBB30P080FMC
	79	Screw	BBZ30P060FZK
	80	Screw	BMZ30P060FNI
	81	Screw	BPZ30P100FZK
	82	Screw	CBZ30P080FZK
	83	Screw	PMZ26P060FZK
	84	Screw	ABZ30P060FMC
	85	Screw	ABZ30P180FMC
	86	Screw	BMZ30P060FMC

(2) CONTRAST TABLE

PDP-R04E/WYVI6 and PDP-R04E/WYVI6XK are constructed the same except for the following:

Mark	NO	Symbol and Description	PDP-R04E/ WYVI6	PDP-R04E/ WYVI6XK
	30	Terminal Panel E	ANC2353	ANC2359

2.3 FRONT SECTION

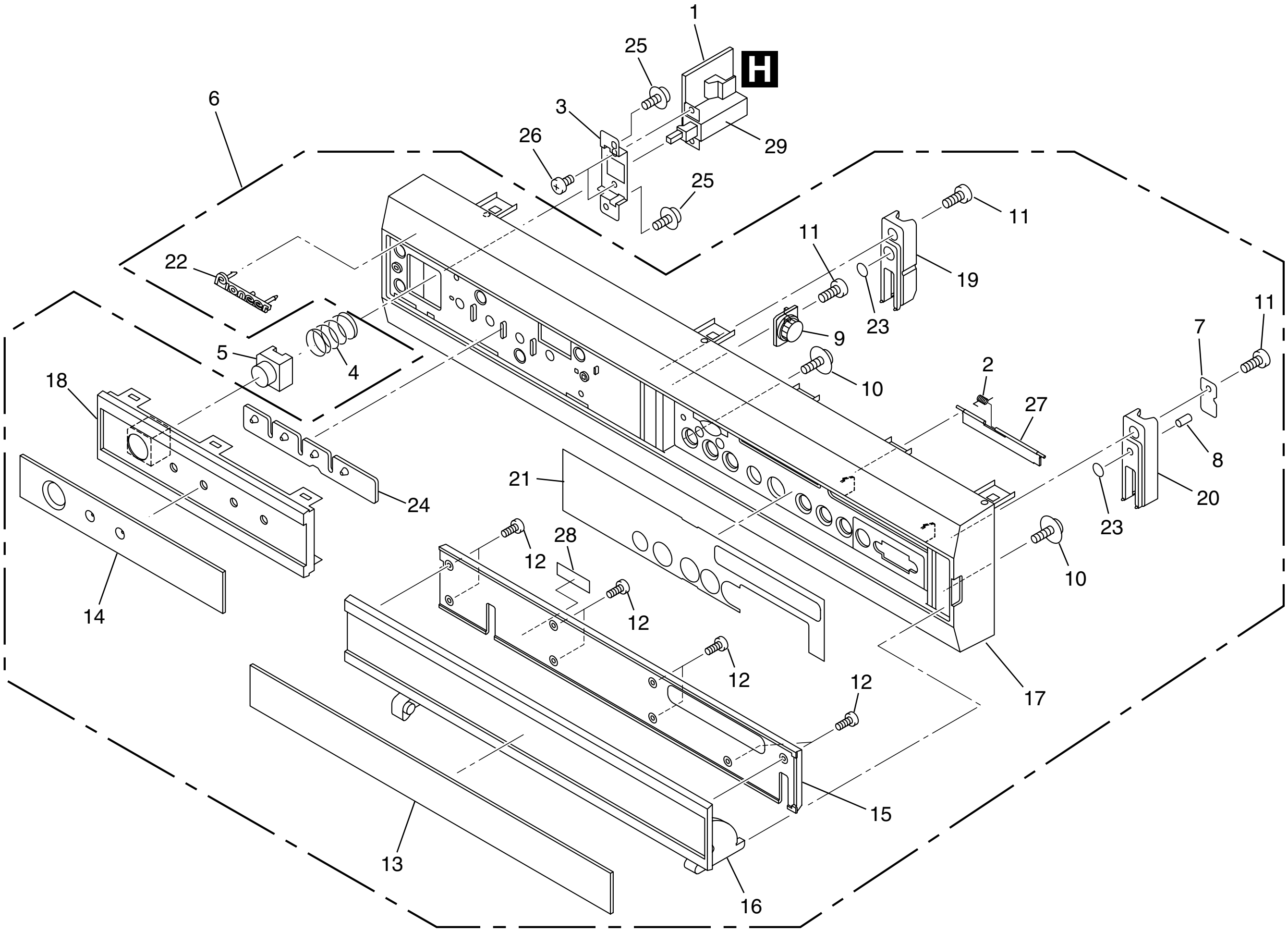
1
25
H
6
3
26
29
25
11
11
19
22
23
11
7
9
5
4
18
10
2
27
8
21
24
20
23
28
12
10
14
12
12
12
17
15
13
16

FRONT SECTION parts List

Mark	No.	Description	Part No.
	1	AC SW Assy	AWZ6783
	2	PC Spring	ABH1112
	3	SW Holder	ANG2565
	4	SW Spring	ABH1109
	5	Power Button	AAD4124
	6	Front Panel Assy E	AXG1004
	7	Magnet Holder	ANG2579
	8	Magnet	AMF1003
	9	Dumper	AXA1017
	10	Special Screw 3x8	ABA1309
	11	Screw	BPZ30P080FZK
	12	Screw	JPZ20P035FNI
	13	Panel A (EGC)	AAK2816
	14	Panel B (EGC)	AAK2805
	15	Door Inner Cover E	AAK2808
	16	Door	AAN1469
	17	Front Panel A E	AMB2772
	18	Front Panel B	AMB2767
	19	Door Cap L	AMR3360
	20	Door Cap R	AMR3361
	21	Sealing Sheet E	AAL2449
	22	Pioneer Badge	VAM1124
	23	Door Cushion	AEB1391
	24	Lens for LED	AMR3353
	25	Screw	APZ30P080FMC
	26	Screw	BMZ30P060FMC
	27	PC Card Door	AMR3365
	28	Serial Sheet	AAX2609
⚠	29	Power Switch (S1)	ASG1093

3. BLOCK DIAGRAM AND SCHEMATIC DIAGRAM

3.1 BLOCK DIAGRAM AND SCHEMATIC DIAGRAM

3.1.1 SIGNAL ROUTE

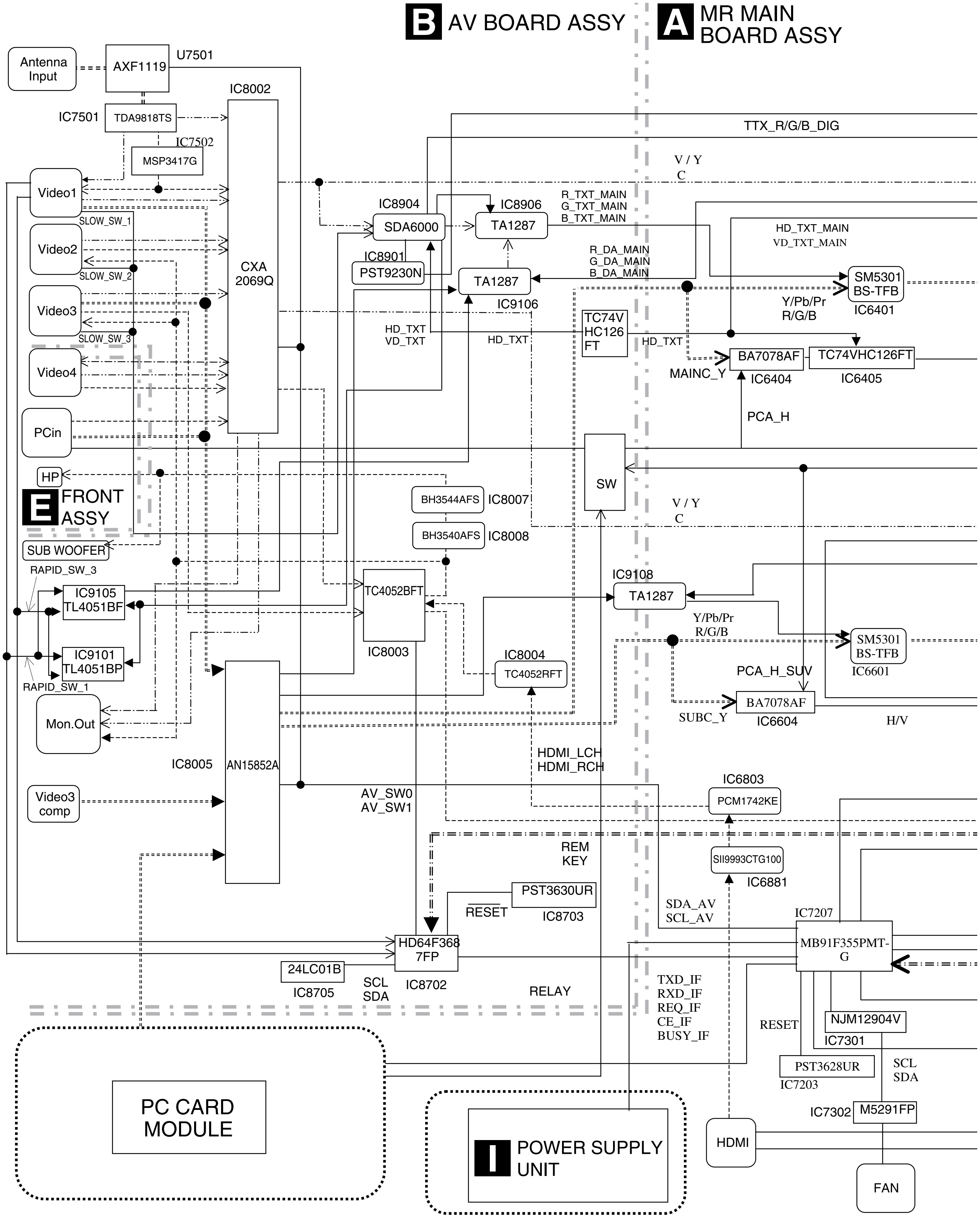
B AV BOARD ASSY
A MR MAIN BOARD ASSY
Antenna Input
AXF1119
U7501
IC7501
TDA9818TS
IC7502
MSP3417G
IC8002
CXA 2069Q
Video1
SLOW_SW_1
Video2
SLOW_SW_2
Video3
SLOW_SW_3
Video4
PCin
HP
E FRONT ASSY
SUB WOOFER
RAPID_SW_3
IC9105 TL4051BF
IC9101 TL4051BP
RAPID_SW_1
Mon.Out
IC8005
AN15852A
Video3 comp
TTX_R/G/B_DIG
V / Y
C
IC8904
SDA6000
IC8906
TA1287
R_TXT_MAIN
G_TXT_MAIN
B_TXT_MAIN
IC8901
PST9230N
TA1287
IC9106
R_DA_MAIN
G_DA_MAIN
B_DA_MAIN
HD_TXT_MAIN
VD_TXT_MAIN
SM5301 BS-TFB
IC6401
Y/Pb/Pr
R/G/B
TC74V HC126 FT
HD_TXT
VD_TXT
HD_TXT
HD_TXT
BA7078AF
IC6404
TC74VHC126FT
IC6405
MAINC_Y
PCA_H
SW
BH3544AFS
IC8007
BH3540AFS
IC8008
V / Y
C
TC4052BFT
IC8003
IC9108
TA1287
Y/Pb/Pr
R/G/B
SM5301 BS-TFB
IC6601
IC8004
TC4052RFT
PCA_H_SUV
BA7078AF
IC6604
SUBC_Y
H/V
HDMI_LCH
HDMI_RCH
AV_SW0
AV_SW1
IC6803
PCM1742KE
REM
KEY
SII9993CTG100
IC6881
PST3630UR
IC8703
RESET
SDA_AV
SCL_AV
IC7207
MB91F355PMT-G
HD64F368 7FP
24LC01B
IC8705
SCL
SDA
IC8702
RELAY
TXD_IF
RXD_IF
REQ_IF
CE_IF
BUSY_IF
RESET
NJM12904V
IC7301
PST3628UR
IC7203
SCL
SDA
IC7302
M5291FP
PC CARD MODULE
I POWER SUPPLY UNIT
HDMI
FAN

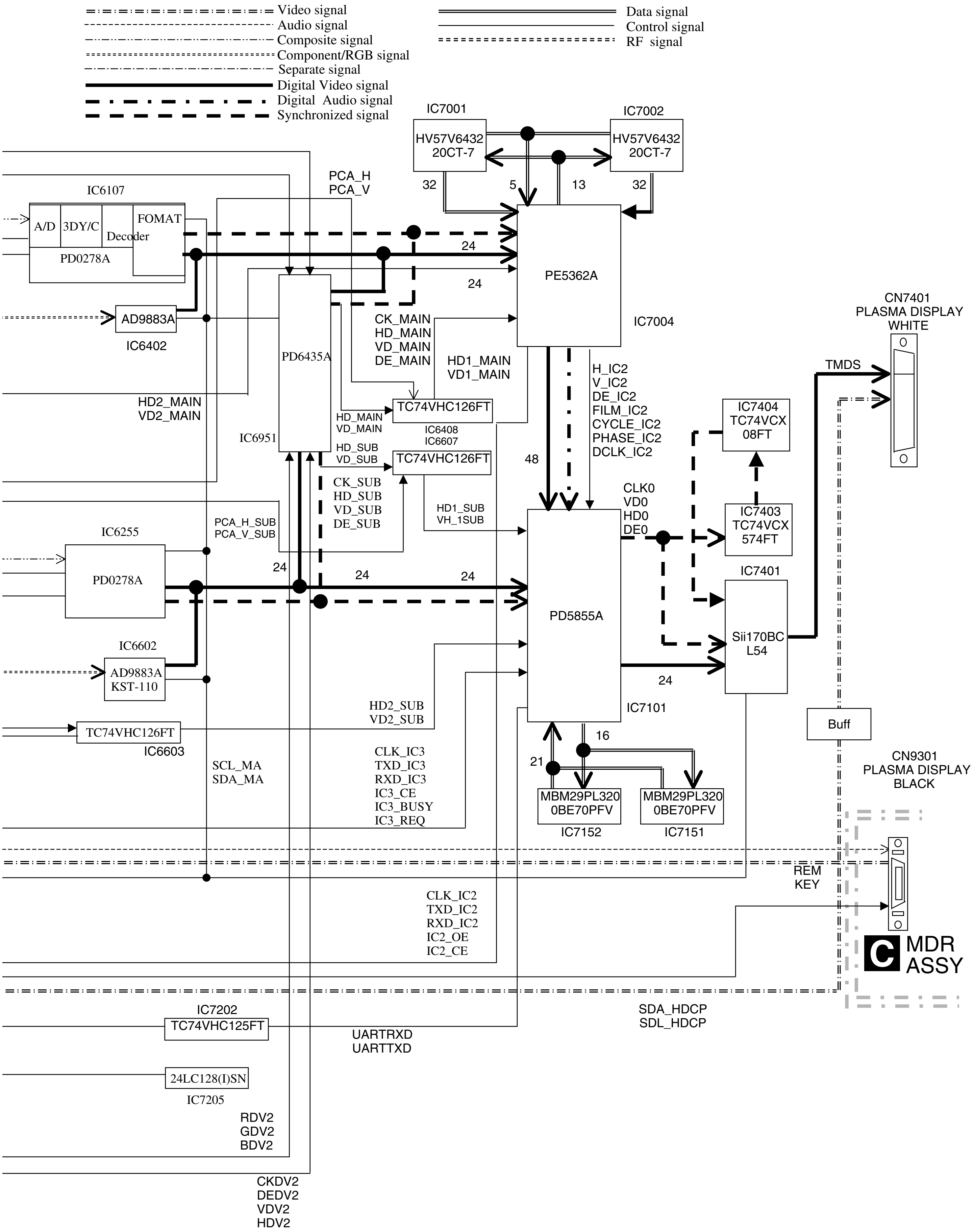
Video signal
Audio signal
Composite signal
Component/RGB signal
Separate signal
Digital Video signal
Digital Audio signal
Synchronized signal
Data signal
Control signal
RF signal
IC7001
HV57V6432 20CT-7
IC7002
HV57V6432 20CT-7
32
5
13
32
PCA_H
PCA_V
IC6107
A/D
3DY/C
Decoder
FOMAT
PD0278A
24
24
PE5362A
IC7004
AD9883A
IC6402
PD6435A
IC6951
CK_MAIN
HD_MAIN
VD_MAIN
DE_MAIN
HD1_MAIN
VD1_MAIN
HD2_MAIN
VD2_MAIN
TC74VHC126FT
HD_MAIN
VD_MAIN
IC6408
IC6607
HD_SUB
VD_SUB
TC74VHC126FT
CK_SUB
HD_SUB
VD_SUB
DE_SUB
48
H_IC2
V_IC2
DE_IC2
FILM_IC2
CYCLE_IC2
PHASE_IC2
DCLK_IC2
CN7401
PLASMA DISPLAY
WHITE
TMDS
IC7404
TC74VCX
08FT
IC7403
TC74VCX
574FT
IC7401
Sii170BC
L54
CLK0
VD0
HD0
DE0
HD1_SUB
VH_1SUB
IC6255
PD0278A
PCA_H_SUB
PCA_V_SUB
24
24
24
PD5855A
IC7101
24
IC6602
AD9883A
KST-110
TC74VHC126FT
IC6603
HD2_SUB
VD2_SUB
SCL_MA
SDA_MA
CLK_IC3
TXD_IC3
RXD_IC3
IC3_CE
IC3_BUSY
IC3_REQ
16
21
MBM29PL320 0BE70PFV
IC7152
MBM29PL320 0BE70PFV
IC7151
Buff
CN9301
PLASMA DISPLAY
BLACK
REM
KEY
CLK_IC2
TXD_IC2
RXD_IC2
IC2_OE
IC2_CE
C
MDR
ASSY
IC7202
TC74VHC125FT
UARTRXD
UARTTXD
SDA_HDCP
SDL_HDCP
24LC128(I)SN
IC7205
RDV2
GDV2
BDV2
CKDV2
DEDV2
VDV2
HDV2

3.1.2 MR MAIN BOARD ASSY

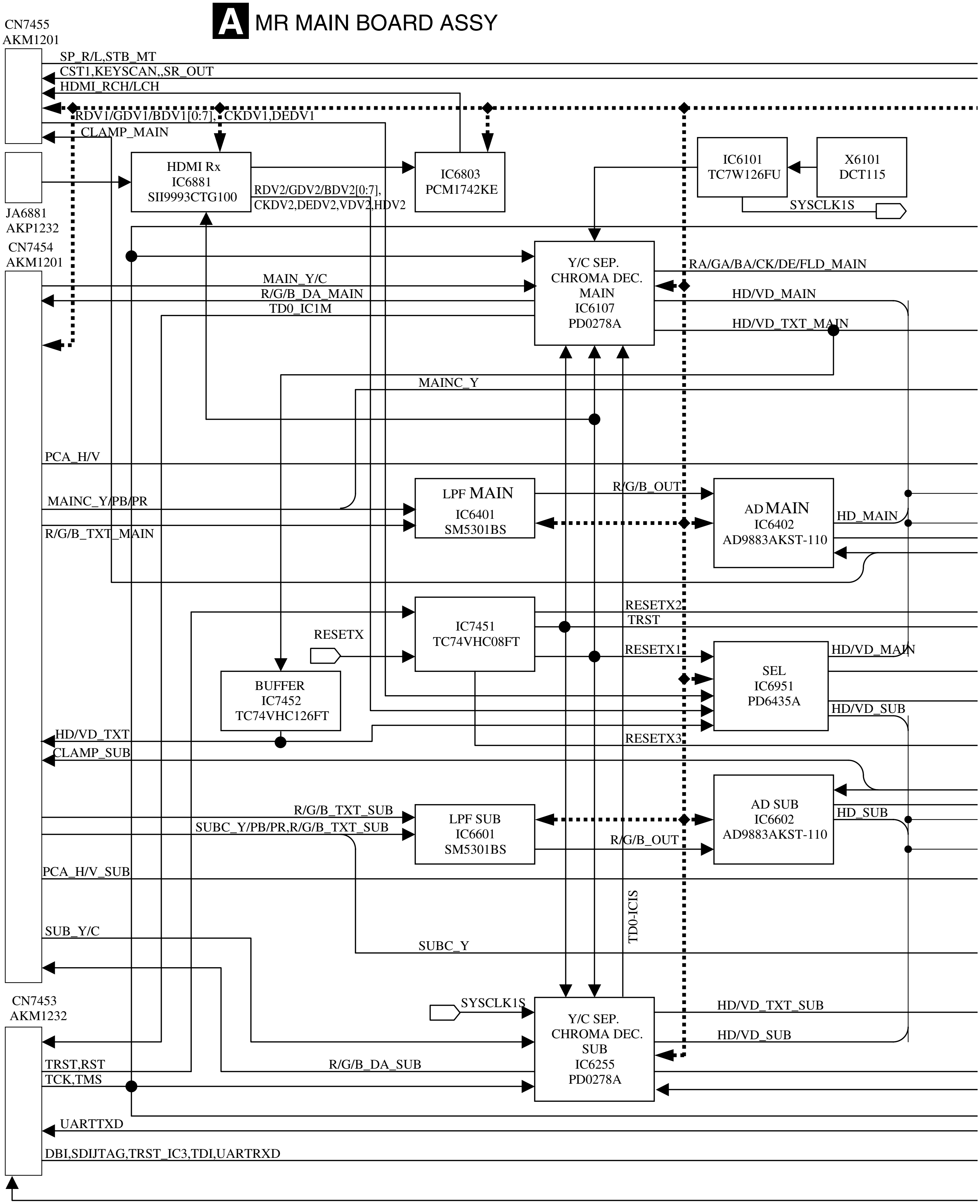
A MR MAIN BOARD ASSY
CN7455
AKM1201
SP_R/L,STB_MT
CST1,KEYSCAN,,SR_OUT
HDMI_RCH/LCH
RDV1/GDV1/BDV1[0:7], CKDV1,DEDV1
CLAMP_MAIN
HDMI Rx
IC6881
SII9993CTG100
RDV2/GDV2/BDV2[0:7],
CKDV2,DEDV2,VDV2,HDV2
IC6803
PCM1742KE
IC6101
TC7W126FU
X6101
DCT115
SYSCLK1S
JA6881
AKP1232
CN7454
AKM1201
Y/C SEP.
CHROMA DEC.
MAIN
IC6107
PD0278A
RA/GA/BA/CK/DE/FLD_MAIN
MAIN_Y/C
R/G/B_DA_MAIN
TD0_IC1M
HD/VD_MAIN
HD/VD_TXT_MAIN
MAINC_Y
PCA_H/V
MAINC_Y/PB/PR
R/G/B_TXT_MAIN
LPF MAIN
IC6401
SM5301BS
R/G/B_OUT
AD MAIN
IC6402
AD9883AKST-110
HD_MAIN
RESETX2
TRST
IC7451
TC74VHC08FT
RESETX
RESETX1
BUFFER
IC7452
TC74VHC126FT
SEL
IC6951
PD6435A
HD/VD_MAIN
HD/VD_SUB
HD/VD_TXT
CLAMP_SUB
RESETX3
R/G/B_TXT_SUB
SUBC_Y/PB/PR,R/G/B_TXT_SUB
LPF SUB
IC6601
SM5301BS
AD SUB
IC6602
AD9883AKST-110
HD_SUB
R/G/B_OUT
PCA_H/V_SUB
TD0-ICIS
SUB_Y/C
SUBC_Y
CN7453
AKM1232
SYSCLK1S
Y/C SEP.
CHROMA DEC.
SUB
IC6255
PD0278A
HD/VD_TXT_SUB
HD/VD_SUB
TRST,RST
R/G/B_DA_SUB
TCK,TMS
UARTTXD
DBI,SDIJTAG,TRST_IC3,TDI,UARTRXD

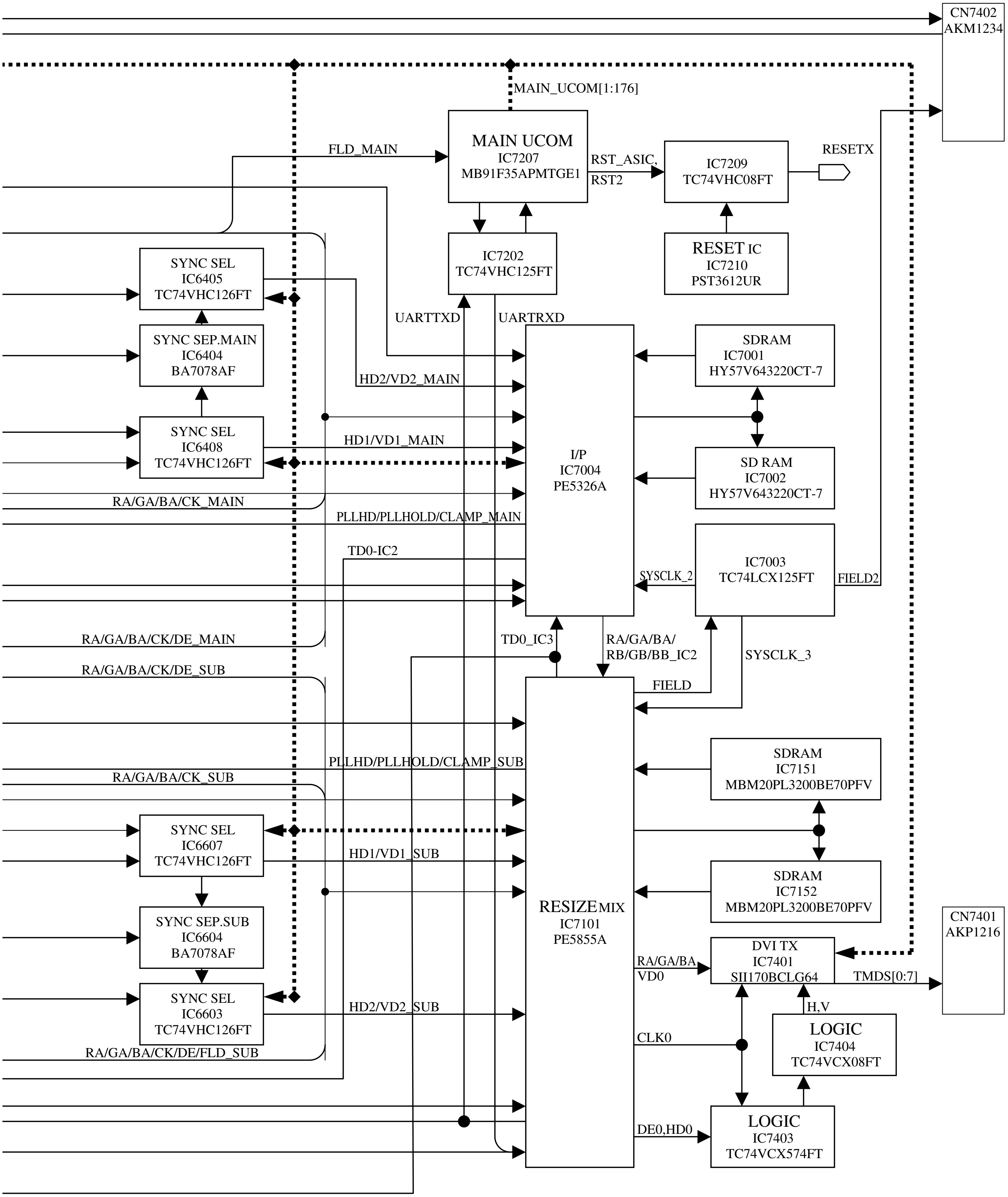
CN7402
AKM1234
MAIN_UCOM[1:176]
MAIN UCOM
IC7207
MB91F35APMTGE1
FLD_MAIN
RST_ASIC,
RST2
IC7209
TC74VHC08FT
RESETX
IC7202
TC74VHC125FT
RESET IC
IC7210
PST3612UR
SYNC SEL
IC6405
TC74VHC126FT
SYNC SEP.MAIN
IC6404
BA7078AF
SYNC SEL
IC6408
TC74VHC126FT
UARTTXD
UARTRXD
HD2/VD2_MAIN
HD1/VD1_MAIN
I/P
IC7004
PE5326A
SDRAM
IC7001
HY57V643220CT-7
SD RAM
IC7002
HY57V643220CT-7
RA/GA/BA/CK_MAIN
PLLHD/PLLHOLD/CLAMP_MAIN
TD0-IC2
IC7003
TC74LCX125FT
SYSCLK_2
FIELD2
RA/GA/BA/CK/DE_MAIN
TD0_IC3
RA/GA/BA/
RB/GB/BB_IC2
SYSCLK_3
RA/GA/BA/CK/DE_SUB
FIELD
PLLHD/PLLHOLD/CLAMP_SUB
RA/GA/BA/CK_SUB
SDRAM
IC7151
MBM20PL3200BE70PFV
SYNC SEL
IC6607
TC74VHC126FT
HD1/VD1_SUB
SDRAM
IC7152
MBM20PL3200BE70PFV
SYNC SEP.SUB
IC6604
BA7078AF
RESIZE MIX
IC7101
PE5855A
CN7401
AKP1216
DVI TX
IC7401
SII170BCLG64
RA/GA/BA
VD0
TMDS[0:7]
SYNC SEL
IC6603
TC74VHC126FT
HD2/VD2_SUB
H,V
LOGIC
IC7404
TC74VCX08FT
RA/GA/BA/CK/DE/FLD_SUB
CLK0
DE0,HD0
LOGIC
IC7403
TC74VCX574FT

3.1.3 AV BOARD ASSY

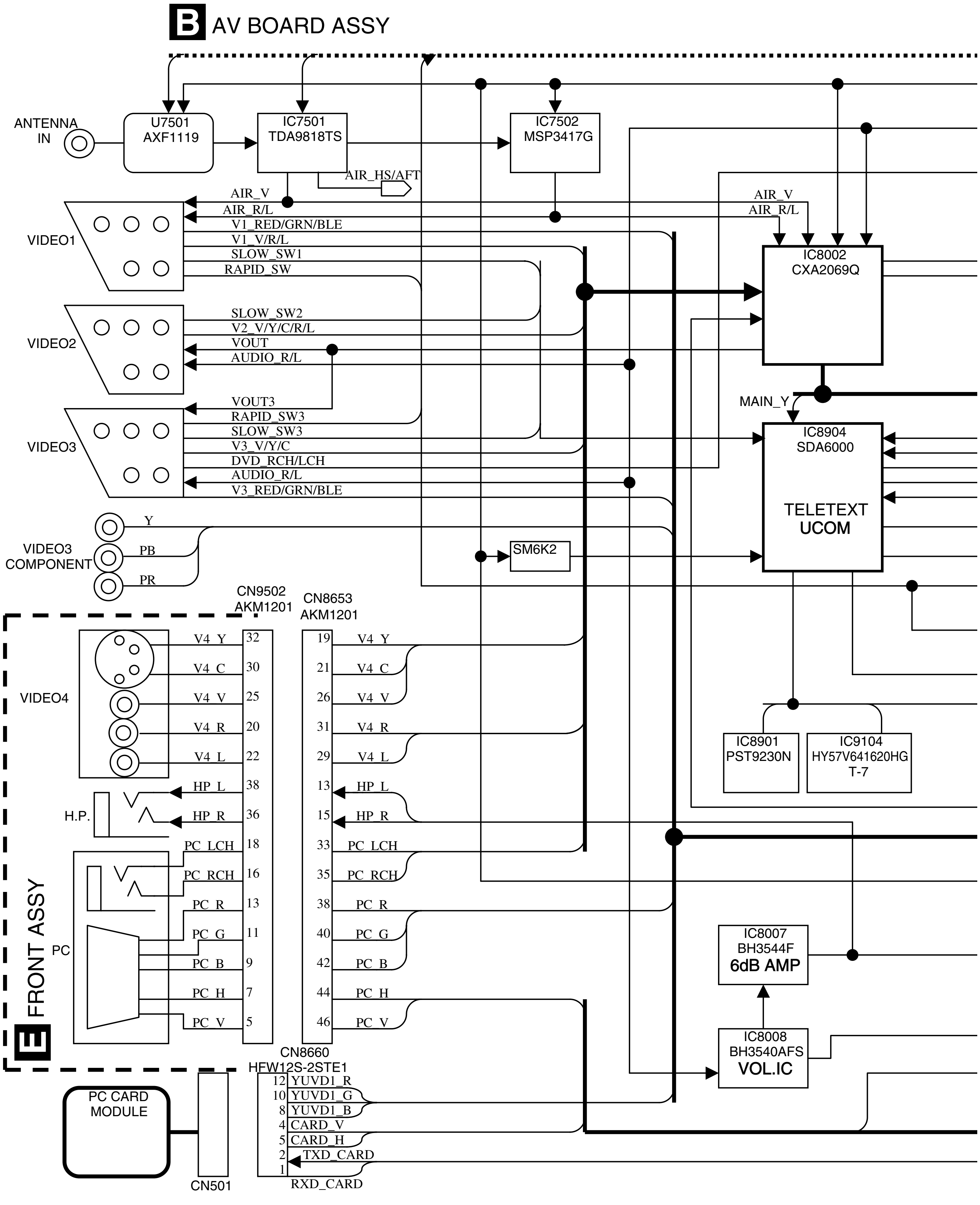
B
AV BOARD ASSY
ANTENNA IN
U7501
AXF1119
IC7501
TDA9818TS
IC7502
MSP3417G
AIR_HS/AFT
AIR_V
AIR_R/L
VIDEO1
V1_RED/GRN/BLE
V1_V/R/L
SLOW_SW1
RAPID_SW
AIR_V
AIR_R/L
IC8002
CXA2069Q
VIDEO2
SLOW_SW2
V2_V/Y/C/R/L
VOUT
AUDIO_R/L
MAIN_Y
VIDEO3
VOUT3
RAPID_SW3
SLOW_SW3
V3_V/Y/C
DVD_RCH/LCH
AUDIO_R/L
V3_RED/GRN/BLE
IC8904
SDA6000
TELETEXT
UCOM
VIDEO3 COMPONENT
Y
PB
PR
SM6K2
CN9502
AKM1201
CN8653
AKM1201
VIDEO4
V4_Y 32 19 V4_Y
V4_C 30 21 V4_C
V4_V 25 26 V4_V
V4_R 20 31 V4_R
V4_L 22 29 V4_L
H.P.
HP_L 38 13 HP_L
HP_R 36 15 HP_R
PC
PC_LCH 18 33 PC_LCH
PC_RCH 16 35 PC_RCH
PC_R 13 38 PC_R
PC_G 11 40 PC_G
PC_B 9 42 PC_B
PC_H 7 44 PC_H
PC_V 5 46 PC_V
IC8901
PST9230N
IC9104
HY57V641620HG
T-7
IC8007
BH3544F
6dB AMP
IC8008
BH3540AFS
VOL.IC
E
FRONT ASSY
CN8660
HFW12S-2STE1
12 YUVD1_R
10 YUVD1_G
8 YUVD1_B
4 CARD_V
5 CARD_H
2 TXD_CARD
1 RXD_CARD
PC CARD MODULE
CN501

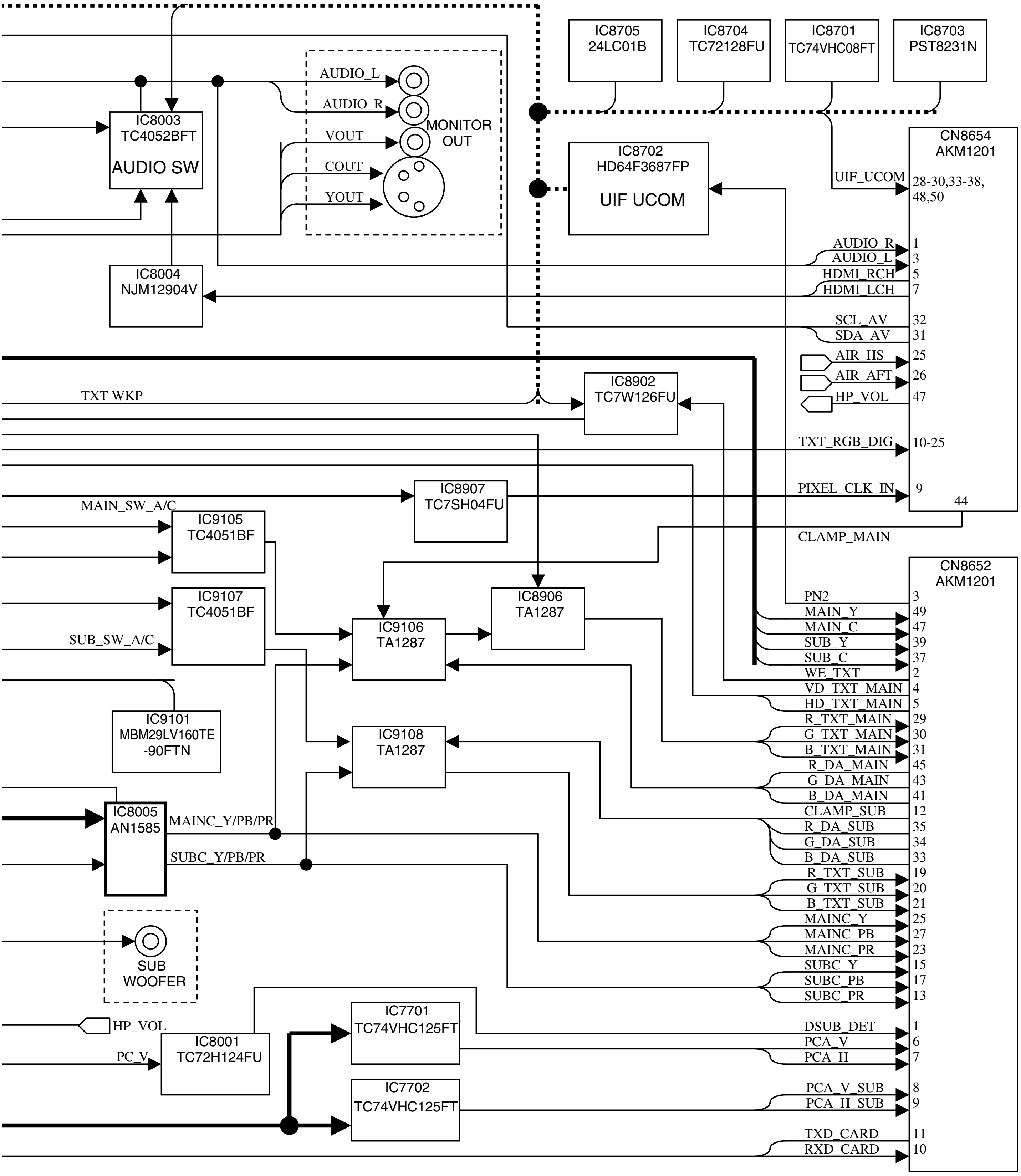
IC8705
24LC01B
IC8704
TC72128FU
IC8701
TC74VHC08FT
IC8703
PST8231N
IC8003
TC4052BFT
AUDIO SW
AUDIO_L
AUDIO_R
VOUT
COUT
YOUT
MONITOR
OUT
IC8702
HD64F3687FP
UIF UCOM
CN8654
AKM1201
UIF_UCOM
28-30,33-38,
48,50
AUDIO_R 1
AUDIO_L 3
HDMI_RCH 5
HDMI_LCH 7
SCL_AV 32
SDA_AV 31
AIR_HS 25
AIR_AFT 26
HP_VOL 47
TXT_RGB_DIG 10-25
PIXEL_CLK_IN 9
44
IC8004
NJM12904V
TXT WKP
IC8902
TC7W126FU
IC8907
TC7SH04FU
MAIN_SW_A/C
IC9105
TC4051BF
CLAMP_MAIN
CN8652
AKM1201
IC9107
TC4051BF
SUB_SW_A/C
IC9106
TA1287
IC8906
TA1287
PN2 3
MAIN_Y 49
MAIN_C 47
SUB_Y 39
SUB_C 37
WE_TXT 2
VD_TXT_MAIN 4
HD_TXT_MAIN 5
R_TXT_MAIN 29
G_TXT_MAIN 30
B_TXT_MAIN 31
R_DA_MAIN 45
G_DA_MAIN 43
B_DA_MAIN 41
CLAMP_SUB 12
R_DA_SUB 35
G_DA_SUB 34
B_DA_SUB 33
R_TXT_SUB 19
G_TXT_SUB 20
B_TXT_SUB 21
MAINC_Y 25
MAINC_PB 27
MAINC_PR 23
SUBC_Y 15
SUBC_PB 17
SUBC_PR 13
DSUB_DET 1
PCA_V 6
PCA_H 7
PCA_V_SUB 8
PCA_H_SUB 9
TXD_CARD 11
RXD_CARD 10
IC9101
MBM29LV160TE
-90FTN
IC9108
TA1287
IC8005
AN1585
MAINC_Y/PB/PR
SUBC_Y/PB/PR
SUB
WOOFER
HP_VOL
PC_V
IC8001
TC72H124FU
IC7701
TC74VHC125FT
IC7702
TC74VHC125FT

3.1.4 POWER SUPPLY UNIT

I POWER SUPPLY UNIT

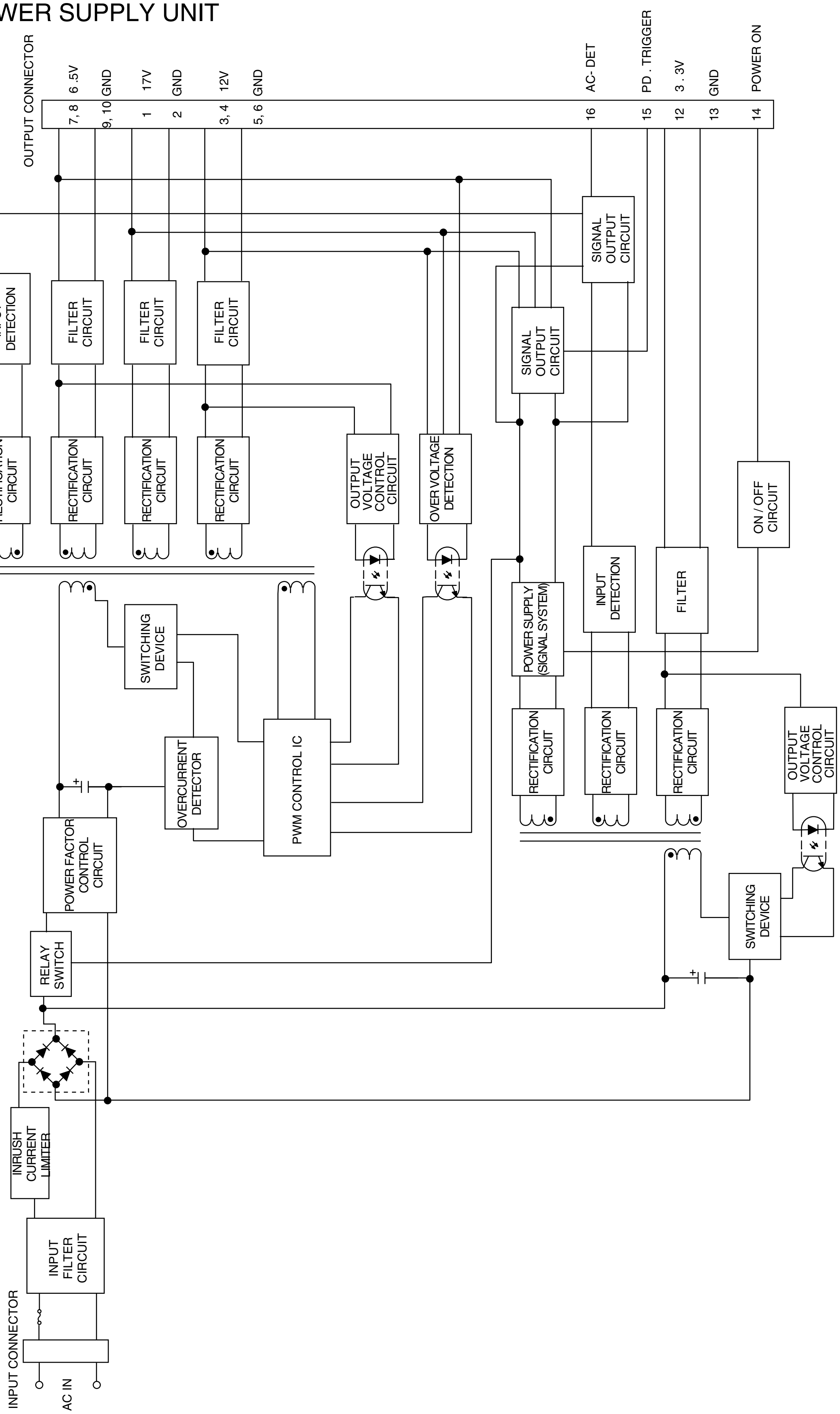
OUTPUT CONNECTOR
7, 8 6 .5V
9, 10 GND
1 17V
2 GND
3, 4 12V
5, 6 GND
16 AC- DET
15 PD . TRIGGER
12 3 . 3V
13 GND
14 POWER ON
INPUT DETECTION
FILTER CIRCUIT
FILTER CIRCUIT
FILTER CIRCUIT
SIGNAL OUTPUT CIRCUIT
SIGNAL OUTPUT CIRCUIT
RECTIFICATION CIRCUIT
RECTIFICATION CIRCUIT
RECTIFICATION CIRCUIT
RECTIFICATION CIRCUIT
OUTPUT VOLTAGE CONTROL CIRCUIT
OVER VOLTAGE DETECTION
ON / OFF CIRCUIT
SWITCHING DEVICE
POWER SUPPLY (SIGNAL SYSTEM)
INPUT DETECTION
FILTER
OVERCURRENT DETECTOR
PWM CONTROL IC
RECTIFICATION CIRCUIT
RECTIFICATION CIRCUIT
RECTIFICATION CIRCUIT
OUTPUT VOLTAGE CONTROL CIRCUIT
POWER FACTOR CONTROL CIRCUIT
SWITCHING DEVICE
RELAY SWITCH
INRUSH CURRENT LIMITER
INPUT FILTER CIRCUIT
INPUT CONNECTOR
AC IN

3.1.5 PC CARD MODULE

J PC CARD MODURE

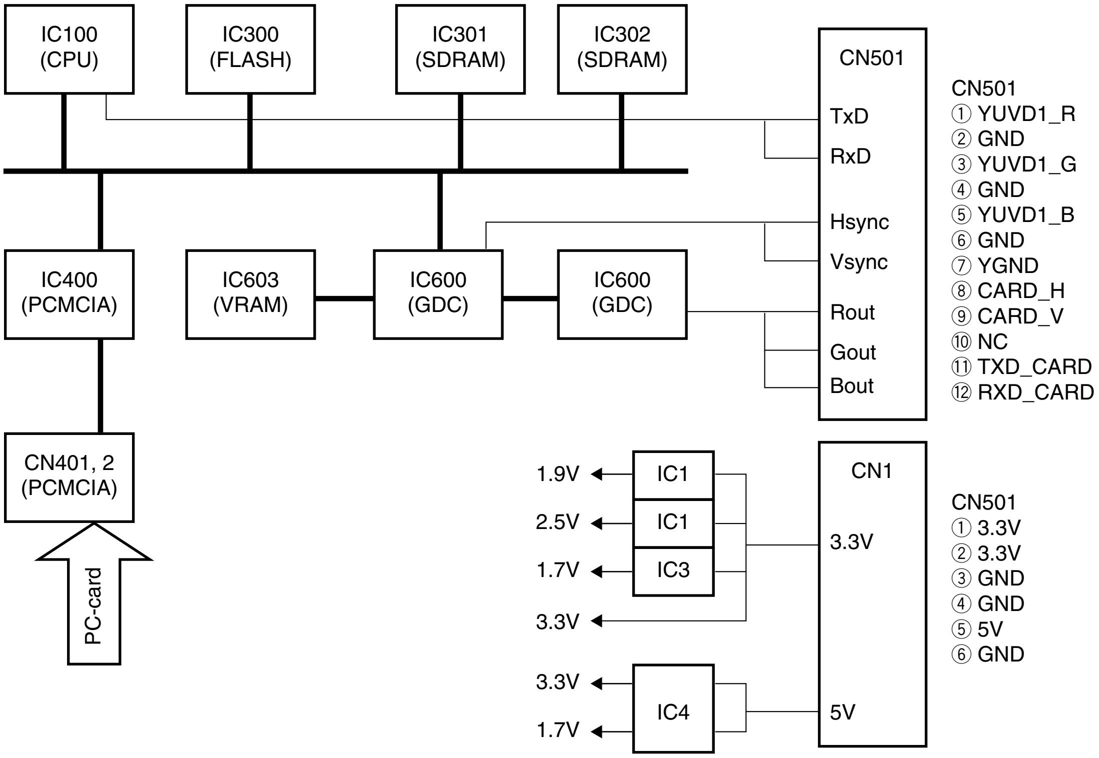
IC100
(CPU)
IC300
(FLASH)
IC301
(SDRAM)
IC302
(SDRAM)
CN501
TxD
RxD
Hsync
Vsync
Rout
Gout
Bout
CN501
① YUVD1_R
② GND
③ YUVD1_G
④ GND
⑤ YUVD1_B
⑥ GND
⑦ YGND
⑧ CARD_H
⑨ CARD_V
⑩ NC
⑪ TXD_CARD
⑫ RXD_CARD
IC400
(PCMCIA)
IC603
(VRAM)
IC600
(GDC)
IC600
(GDC)
CN401, 2
(PCMCIA)
PC-card
1.9V
2.5V
1.7V
3.3V
IC1
IC1
IC3
CN1
3.3V
CN501
① 3.3V
② 3.3V
③ GND
④ GND
⑤ 5V
⑥ GND
3.3V
1.7V
IC4
5V

3.2 OVERALL WIRING DIAGRAM

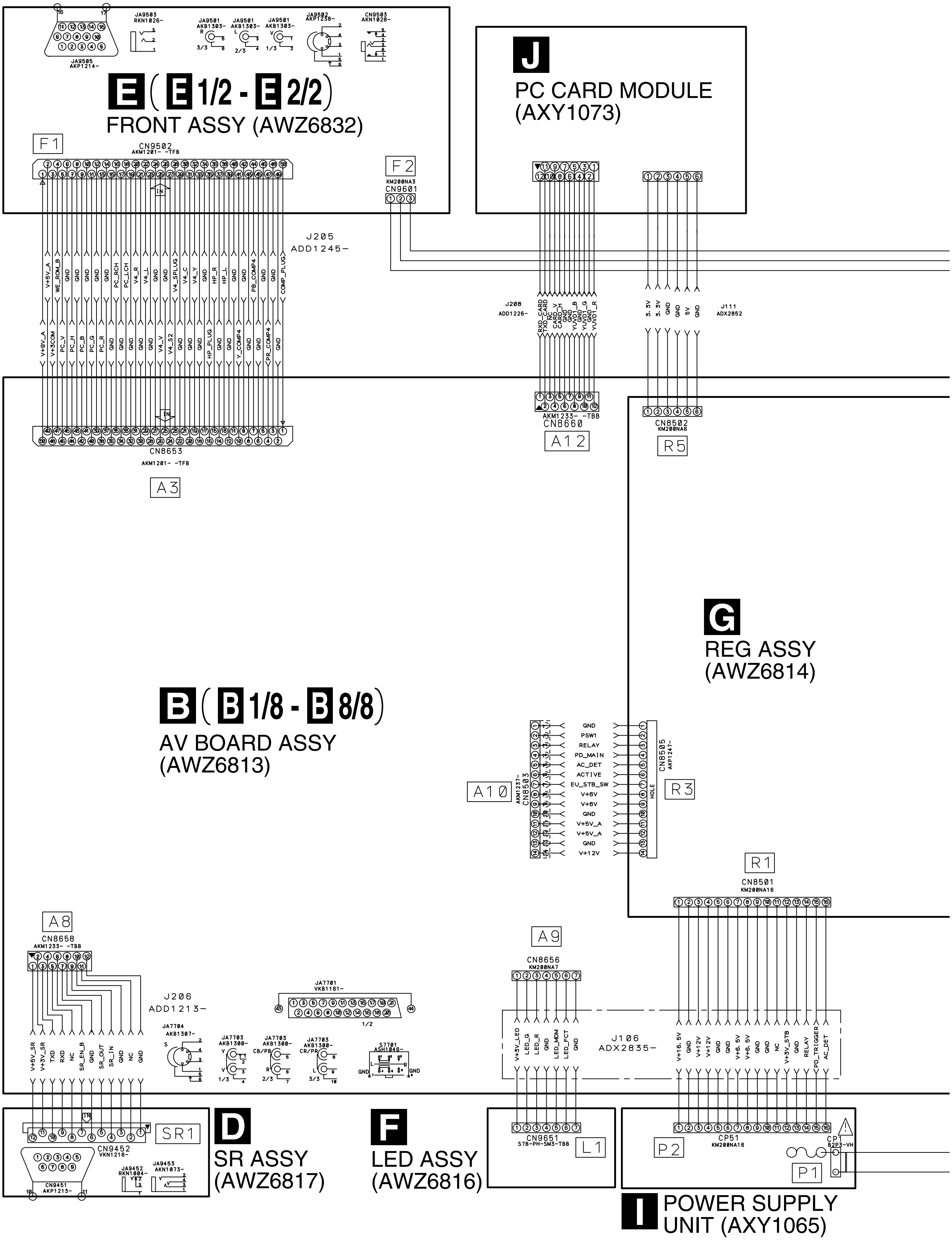

E (E 1/2 - E 2/2)
FRONT ASSY (AWZ6832)
JA9505 AKP1214-
JA9503 RKN1026-
JA9501 AKB1303-
JA9502 AKP1238-
CN9503 AKN1028-
F1
CN9502 AKM1201- -TFB
F2
KM200NA3 CN9601
J PC CARD MODULE (AXY1073)
J205 ADD1245-
V+5V_A
WE_ROM_B
GND
PC_RCH
PC_LCH
V4_R
V4_L
V4_SPLUG
V4_C
V4_Y
HP_R
HP_L
PB_COMP4
COMP_PLUG
V+8V_A
V+3COM
PC_V
PC_H
PC_B
PC_G
PC_R
V4_V
V4_S2
HP_PLUG
Y_COMP4
PR_COMP4
J208 ADD1226-
RXD_CARD
TXD_CARD
NC
CARD_V
CARD_H
YUVD1_B
YUVD1_G
YUVD1_R
3.3V
5V
J111 ADX2852
CN8653 AKM1201- -TFB
A3
AKM1233- -TBB CN8660
A12
CN8502 KM200NA6
R5
G REG ASSY (AWZ6814)
B (B 1/8 - B 8/8)
AV BOARD ASSY (AWZ6813)
A10
AKM1237- CN8503
PSW1
RELAY
PD_MAIN
AC_DET
ACTIVE
EU_STB_SW
V+6V
V+5V_A
V+12V
CN8505 AKP1247-
HOLE
R3
R1
CN8501 KM200NA16
A8
CN8658 AKM1233- -TBB
J206 ADD1213-
V+5V_SR
V+3V_SR
TXD
RXD
SR_EN_B
SR_OUT
SR_IN
JA7704 AKB1307-
JA7703 AKB1300-
JA7701 VKB1161-
S7701 ASH1048-
A9
CN8656 KM200NA7
V+3V_LED
LED_G
LED_R
LED_MDM
LED_FCT
J106 ADX2835-
V+16.5V
V+12V
V+6.5V
V+3V_STB
PD_TRIGGER
SR1
CN9452 VKN1216-
CN9451 AKP1213-
JA9452 RKN1004-
JA9453 AKN1073-
D SR ASSY (AWZ6817)
F LED ASSY (AWZ6816)
CN9651 S78-PH-SM3-TBB
L1
CP51 KM200NA16
P2
CP1 B2P3-VH
P1
I POWER SUPPLY UNIT (AXY1065)
1 2 3 4
A B C D E F

NOTES:
- *When ordering service parts, be sure to refer to "EXPLODED VIEWS and PARTS LIST" or "PCB PARTS LIST".*
- *The ⚠ mark found on some component parts indicates the importance of the safety factor of the part. Therefore, when replacing, be sure to use parts of identical designation.*
- ⬭ *: The power supply is shown with the marked box.*

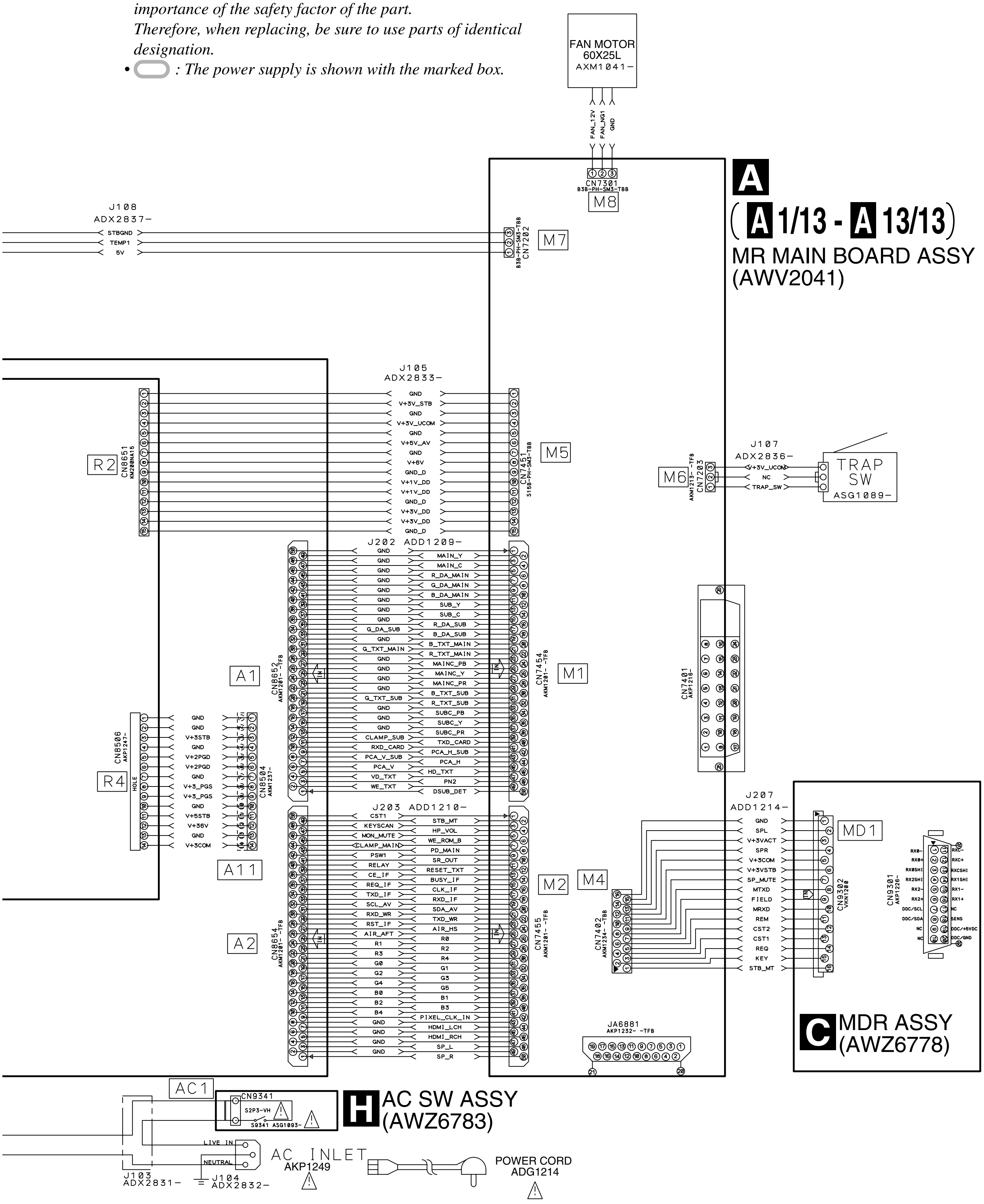
FAN MOTOR
60X25L
AXM1041-
FAN_12V
FAN_NG1
GND
CN7301
B3B-PH-SM3-TBB
M8
A
(A 1/13 - A 13/13)
MR MAIN BOARD ASSY
(AWV2041)
J108
ADX2837-
STBGND
TEMP1
5V
CN7202
B3B-PH-SM3-TBB
M7
J105
ADX2833-
GND
V+3V_STB
GND
V+3V_UCOM
GND
V+5V_AV
GND
V+6V
GND_D
V+1V_DD
V+1V_DD
GND_D
V+3V_DD
V+3V_DD
GND_D
CN8651
KM200NA15
R2
CN7451
S15B-PH-SM3-TBB
M5
J107
ADX2836-
V+3V_UCOM
NC
TRAP_SW
CN7203
AKM1213- -TFB
M6
TRAP SW
ASG1089-
J202 ADD1209-
GND
MAIN_Y
GND
MAIN_C
GND
R_DA_MAIN
GND
G_DA_MAIN
GND
B_DA_MAIN
GND
SUB_Y
GND
SUB_C
GND
R_DA_SUB
G_DA_SUB
B_DA_SUB
GND
B_TXT_MAIN
G_TXT_MAIN
R_TXT_MAIN
GND
MAINC_PB
GND
MAINC_Y
GND
MAINC_PR
GND
B_TXT_SUB
G_TXT_SUB
R_TXT_SUB
GND
SUBC_PB
GND
SUBC_Y
GND
SUBC_PR
CLAMP_SUB
TXD_CARD
RXD_CARD
PCA_H_SUB
PCA_V_SUB
PCA_H
PCA_V
HD_TXT
VD_TXT
PN2
WE_TXT
DSUB_DET
IN
CN8652
AKM1201- -TFB
A1
CN7454
AKM1201- -TFB
M1
CN7401
AKP1216-
CN8506
AKP1247-
HOLE
R4
GND
GND
V+3STB
GND
V+2PGD
V+2PGD
GND
V+3_PGS
V+3_PGS
GND
V+5STB
V+36V
GND
V+3COM
CN8504
AKM1237-
A11
J203 ADD1210-
CST1
STB_MT
KEYSCAN
HP_VOL
MON_MUTE
WE_ROM_B
CLAMP_MAIN
PD_MAIN
PSW1
SR_OUT
RELAY
RESET_TXT
CE_IF
BUSY_IF
REQ_IF
CLK_IF
TXD_IF
RXD_IF
SCL_AV
SDA_AV
RXD_WR
TXD_WR
RST_IF
AIR_HS
AIR_AFT
R0
R1
R2
R3
R4
G0
G1
G2
G3
G4
G5
B0
B1
B2
B3
B4
PIXEL_CLK_IN
GND
HDMI_LCH
GND
HDMI_RCH
GND
SP_L
GND
SP_R
CN8654
AKM1201- -TFB
A2
CN7455
AKM1201- -TFB
M2
M4
CN7402
AKM1234- -TBB
J207
ADD1214-
GND
SPL
V+3VACT
SPR
V+3COM
V+3VSTB
SP_MUTE
MTXD
FIELD
MRXD
REM
CST2
CST1
REQ
KEY
STB_MT
CN9302
VKN1200
MD1
CN9301
AKP1226-
RX0-
RX0+
RX0SHI
RX2SHI
RX2-
RX2+
DDC/SCL
DDC/SDA
NC
NC
RXC-
RXC+
RXCSHI
RX1SHI
RX1-
RX1+
NC
SENS
DDC/+5VDC
DDC/GND
C
MDR ASSY
(AWZ6778)
JA6881
AKP1232- -TFB
AC1
CN9341
S2P3-VH
S9341 ASG1093-
H
AC SW ASSY
(AWZ6783)
LIVE IN
NEUTRAL
AC INLET
AKP1249
J103
ADX2831-
J104
ADX2832-
POWER CORD
ADG1214

3.3 MR MAIN BOARD ASSY (1/13)

A 1/13 MR MAIN BOARD ASSY (AWV2041)

● GR BLOCK

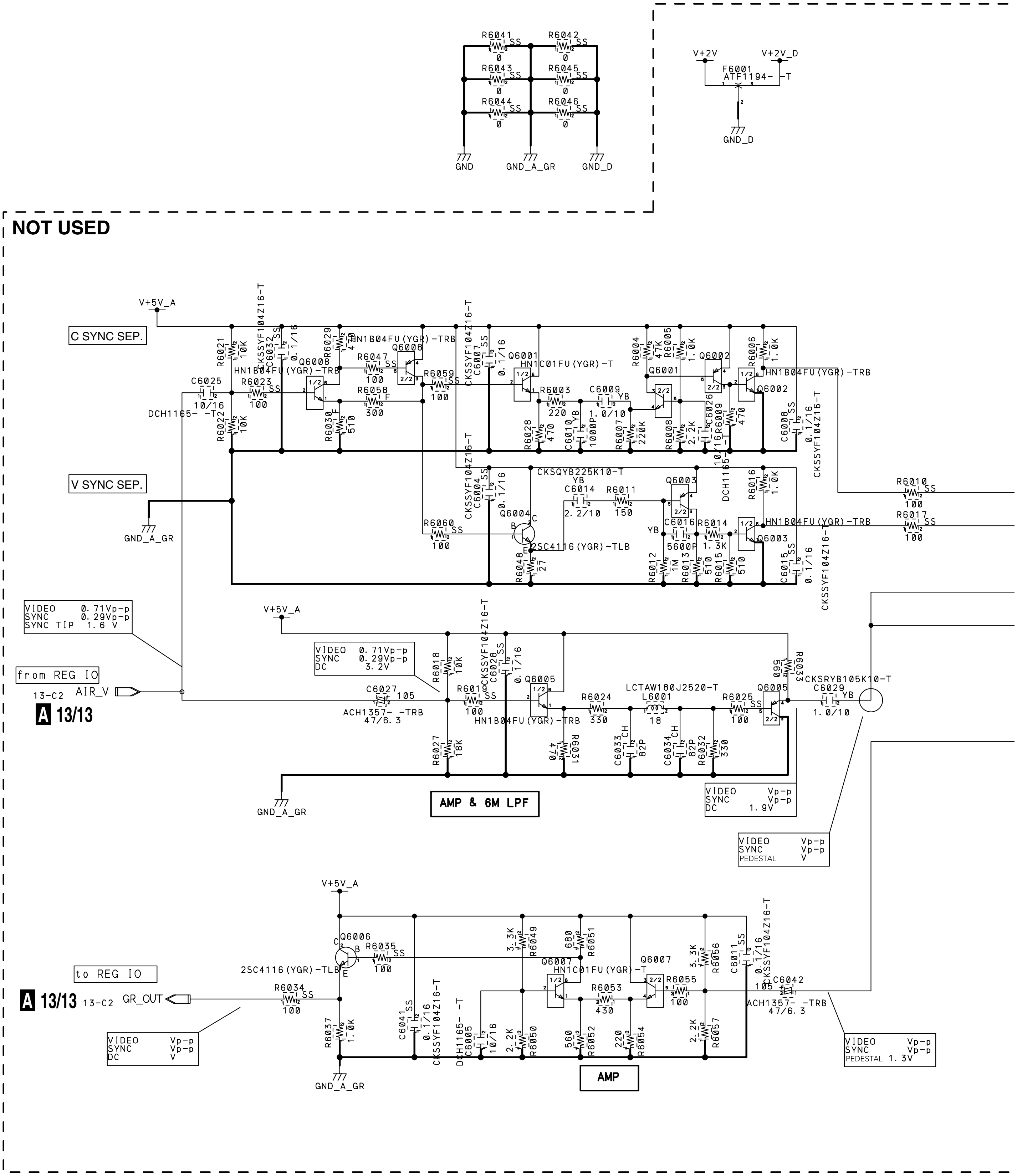
R6041 0 SS
R6042 0 SS
R6043 0 SS
R6045 0 SS
R6044 0 SS
R6046 0 SS
GND
GND_A_GR
GND_D
V+2V
V+2V_D
F6001
ATF1194- -T
GND_D
NOT USED
V+5V_A
C SYNC SEP.
R6021 10K
CKSSYF104Z16-T
C6032 0.1/16 SS
R6029 470
HN1B04FU(YGR)-TRB
Q6008
R6047 100 SS
Q6008
HN1B04FU(YGR)-TRB
R6059 100 SS
R6023 100 SS
R6058 300 F
C6025 10/16
DCH1165- -T
R6022 10K
R6030 510 F
CKSSYF104Z16-T
C6007 0.1/16 SS
Q6001
HN1C01FU(YGR)-T
R6003 220
C6009 1.0/10 YB
R6028 470
C6010 1000P YB
R6007 220K
R6004 47K
R6005 1.0K
Q6001
Q6002
R6006 1.0K
HN1B04FU(YGR)-TRB
Q6002
R6008 2.2K
C6026 10/16
R6009 470
DCH1165- -T
C6008 0.1/16 SS
CKSSYF104Z16-T
R6010 100 SS
R6017 100 SS
V SYNC SEP.
GND_A_GR
CKSSYF104Z16-T
C6004 0.1/16 SS
CKSQYB225K10-T
C6014 2.2/10 YB
R6011 150
Q6003
R6016 1.0K
Q6004
2SC4116(YGR)-TLB
R6060 100 SS
R6048 27
C6016 5600P YB
R6014 1.3K
HN1B04FU(YGR)-TRB
Q6003
R6012 1M
R6013 510
R6015 510
C6015 0.1/16 SS
CKSSYF104Z16-T
VIDEO 0.71Vp-p
SYNC 0.29Vp-p
SYNC TIP 1.6 V
from REG IO
13-C2
AIR_V
A 13/13
V+5V_A
VIDEO 0.71Vp-p
SYNC 0.29Vp-p
DC 3.2V
C6027 105
ACH1357- -TRB
47/6.3
R6018 10K
CKSSYF104Z16-T
C6028 0.1/16 SS
R6019 100 SS
Q6005
HN1B04FU(YGR)-TRB
R6027 18K
R6031 470
R6024 330
LCTAW180J2520-T
L6001 18
C6033 82P CH
C6034 82P CH
R6032 330
R6025 100 SS
Q6005
R6033 560
CKSRYB105K10-T
C6029 1.0/10 YB
GND_A_GR
AMP & 6M LPF
VIDEO Vp-p
SYNC Vp-p
DC 1.9V
VIDEO Vp-p
SYNC Vp-p
PEDESTAL V
V+5V_A
Q6006
R6035 100 SS
2SC4116(YGR)-TLB
to REG IO
A 13/13 13-C2
GR_OUT
R6034 100 SS
VIDEO Vp-p
SYNC Vp-p
DC V
R6037 1.0K
GND_A_GR
C6041 0.1/16 SS
CKSSYF104Z16-T
C6005 10/16
DCH1165- -T
R6049 3.3K
R6050 2.2K
R6051 680
Q6007
HN1C01FU(YGR)-T
R6053 430
R6052 560
R6054 220
Q6007
R6055 100
R6056 3.3K
R6057 2.2K
C6011 0.1/16 SS
CKSSYF104Z16-T
C6042 105
ACH1357- -TRB
47/6.3
AMP
VIDEO Vp-p
SYNC Vp-p
PEDESTAL 1.3V

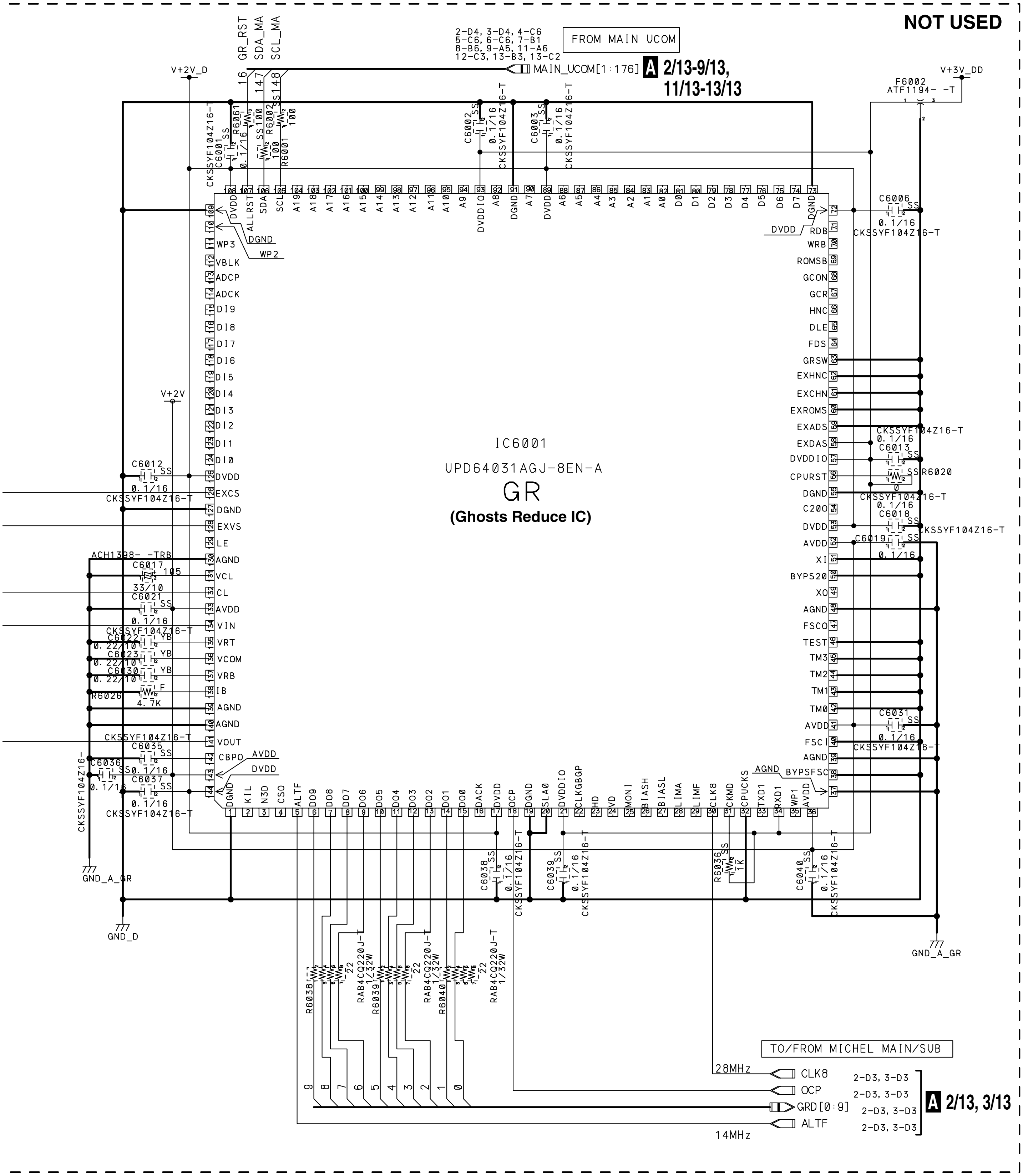
NOT USED
FROM MAIN UCOM
2-D4, 3-D4, 4-C6
5-C6, 6-C6, 7-B1
8-B6, 9-A5, 11-A6
12-C3, 13-B3, 13-C2
MAIN_UCOM[1:176]
A 2/13-9/13, 11/13-13/13
GR_RST
SDA_MA
SCL_MA
16
147
148
V+2V_D
V+3V_DD
F6002
ATF1194- -T
C6001 SS 0.1/16 CKSSYF104Z16-T
R6061 SS 100
R6002 SS 100
R6001 SS 100
C6002 SS 0.1/16 CKSSYF104Z16-T
C6003 SS 0.1/16 CKSSYF104Z16-T
C6006 SS 0.1/16 CKSSYF104Z16-T
IC6001
UPD64031AGJ-8EN-A
GR
(Ghosts Reduce IC)
DVDD ALLRST SDA SCL A19 A18 A17 A16 A15 A14 A13 A12 A11 A10 A9 DVDDIO A8 DGND A7 DVDD A6 A5 A4 A3 A2 A1 A0 D0 D1 D2 D3 D4 D5 D6 D7 DGND
DVDD WP3 VBLK ADCP ADCK DI9 DI8 DI7 DI6 DI5 DI4 DI3 DI2 DI1 DI0 DVDD EXCS DGND EXVS LE AGND VCL CL AVDD VIN VRT VCOM VRB IB AGND AGND VOUT CBPO DGND
DGND WP2
RDB WRB ROMSB GCON GCR HNC DLE FDS GRSW EXHNC EXCHN EXROMS EXADS EXDAS DVDDIO CPURST DGND C20O DVDD AVDD XI BYPS20 XO AGND FSCO TEST TM3 TM2 TM1 TM0 AVDD FSCI AGND BYPSFSC
DGND KIL N3D CSO ALTF DO9 DO8 DO7 DO6 DO5 DO4 DO3 DO2 DO1 DO0 DACK DVDD OCP DGND SLA0 DVDDIO CLKGBGP HD VD MONI BIASH BIASL LIMA LIMF CLK8 CKMD CPUCKS TXD1 RXD1 WP1 AVDD
V+2V
C6012 SS 0.1/16 CKSSYF104Z16-T
ACH1398- -TRB
C6017 105 33/10
C6021 SS 0.1/16 CKSSYF104Z16-T
C6022 YB 0.22/10
C6023 YB 0.22/10
C6030 YB 0.22/10
R6026 F 4.7K
C6035 SS 0.1/16 CKSSYF104Z16-T
C6036 SS 0.1/16 CKSSYF104Z16-
C6037 SS 0.1/16 CKSSYF104Z16-T
AVDD
DVDD
GND_A_GR
GND_D
C6013 0.1/16 CKSSYF104Z16-T
R6020 SS 0
C6018 0.1/16 CKSSYF104Z16-T
C6019 SS 0.1/16 CKSSYF104Z16-T
C6031 SS 0.1/16 CKSSYF104Z16-T
AGND
C6038 SS 0.1/16 CKSSYF104Z16-T
C6039 SS 0.1/16 CKSSYF104Z16-T
R6036 SS 1K
C6040 SS 0.1/16 CKSSYF104Z16-T
GND_A_GR
R6038 RAB4CQ220J-T 1/32W 22
R6039 RAB4CQ220J-T 1/32W 22
R6040 RAB4CQ220J-T 1/32W 22
9 8 7 6 5 4 3 2 1 0
TO/FROM MICHEL MAIN/SUB
28MHz
CLK8
OCP
GRD[0:9]
ALTF
14MHz
2-D3, 3-D3
2-D3, 3-D3
2-D3, 3-D3
2-D3, 3-D3
A 2/13, 3/13

A 1/13

3.4 MR MAIN BOARD ASSY (2/13)

A 2/13 MR MAIN BOARD ASSY (AWV2041)

● MICHAEL MAIN BLOCK

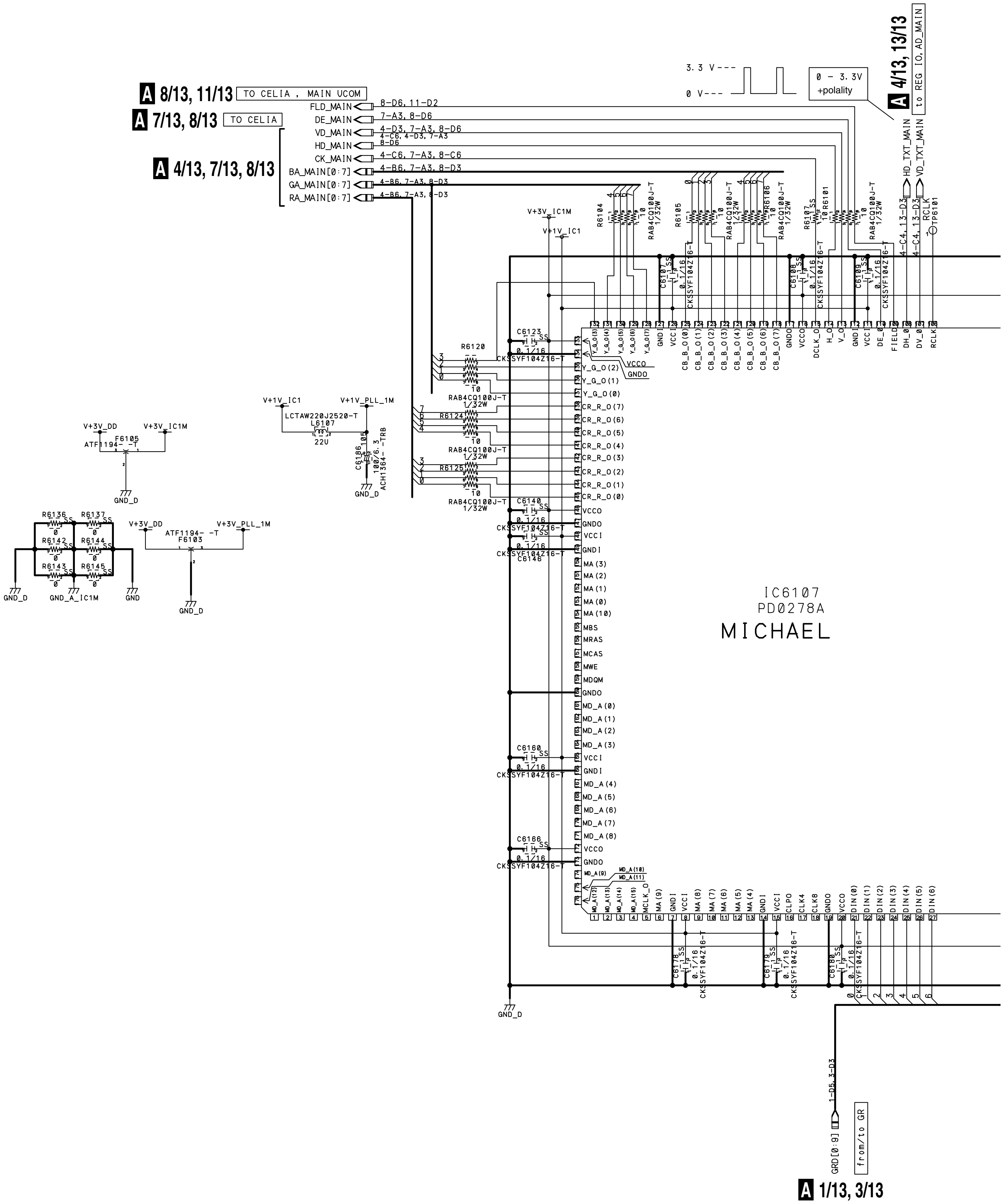
A 8/13, 11/13 TO CELIA , MAIN UCOM
A 7/13, 8/13 TO CELIA
A 4/13, 7/13, 8/13
FLD_MAIN 8-D6, 11-D2
DE_MAIN 7-A3, 8-D6
VD_MAIN 4-D3, 7-A3, 8-D6
HD_MAIN 4-C6, 4-D3, 7-A3 8-D6
CK_MAIN 4-C6, 7-A3, 8-C6
BA_MAIN[0:7] 4-B6, 7-A3, 8-D3
GA_MAIN[0:7] 4-B6, 7-A3, 8-D3
RA_MAIN[0:7] 4-B6, 7-A3, 8-D3
3.3 V---
0 V---
0 - 3.3V +polality
A 4/13, 13/13 to REG IO, AD_MAIN
HD_TXT_MAIN 4-C4, 13-D3
VD_TXT_MAIN 4-C4, 13-D3
RCLK TP6101
R6104 RAB4CQ100J-T 10 1/32W
R6105 RAB4CQ100J-T 10 1/32W
R6106 RAB4CQ100J-T 10 1/32W
R6107 R6101 10 RAB4CQ100J-T 1/32W
V+3V_IC1M
V+1V_IC1
C6107 C6108 C6109 1μ SS 0.1/16 CKSSYF104Z16-T
C6123 1μ SS 0.1/16 CKSSYF104Z16-T
R6120 RAB4CQ100J-T 10 1/32W
R6124 RAB4CQ100J-T 10 1/32W
R6125 RAB4CQ100J-T 10 1/32W
VCCO GNDO
Y_G_O(2) Y_G_O(1) Y_G_O(0)
CR_R_O(7) CR_R_O(6) CR_R_O(5) CR_R_O(4) CR_R_O(3) CR_R_O(2) CR_R_O(1) CR_R_O(0)
VCCO GNDO VCCI GNDI
MA(3) MA(2) MA(1) MA(0) MA(10) MBS MRAS MCAS MWE MDQM GNDO
MD_A(0) MD_A(1) MD_A(2) MD_A(3) VCCI GNDI MD_A(4) MD_A(5) MD_A(6) MD_A(7) MD_A(8) VCCO GNDO
MD_A(9) MD_A(10) MD_A(11) MD_A(12) MD_A(13) MD_A(14) MD_A(15) MCLK_O MA(9)
GNDI VCCI MA(8) MA(7) MA(6) MA(5) MA(4) GNDI VCCI CLPO CLK4 CLK8 GNDO VCCO DIN(0) DIN(1) DIN(2) DIN(3) DIN(4) DIN(5) DIN(6)
Y_G_O(3) Y_G_O(4) Y_G_O(5) Y_G_O(6) Y_G_O(7) GNDI VCCI CB_B_O(0) CB_B_O(1) CB_B_O(2) CB_B_O(3) CB_B_O(4) CB_B_O(5) CB_B_O(6) CB_B_O(7) GNDO VCCO DCLK_O H_O V_O GNDI VCCI DE_O FIELD DH_O DV_O RCLK
IC6107 PD0278A
MICHAEL
C6140 C6146 C6160 C6166 1μ SS 0.1/16 CKSSYF104Z16-T
C6178 C6179 C6180 1μ SS 0.1/16 CKSSYF104Z16-T
GND_D
V+1V_IC1 V+1V_PLL_1M
LCTAW220J2520-T L6107 22U
C6186 100/6.3 ACH1364- -TRB
V+3V_DD V+3V_IC1M F6105 ATF1194- -T
GND_D
R6136 R6137 R6142 R6144 R6143 R6145 0 SS
GND_D GND_A_IC1M GND
V+3V_DD V+3V_PLL_1M ATF1194- -T F6103
GND_D
1-D5, 3-D3
GRD[0:9] from/to GR
A 1/13, 3/13

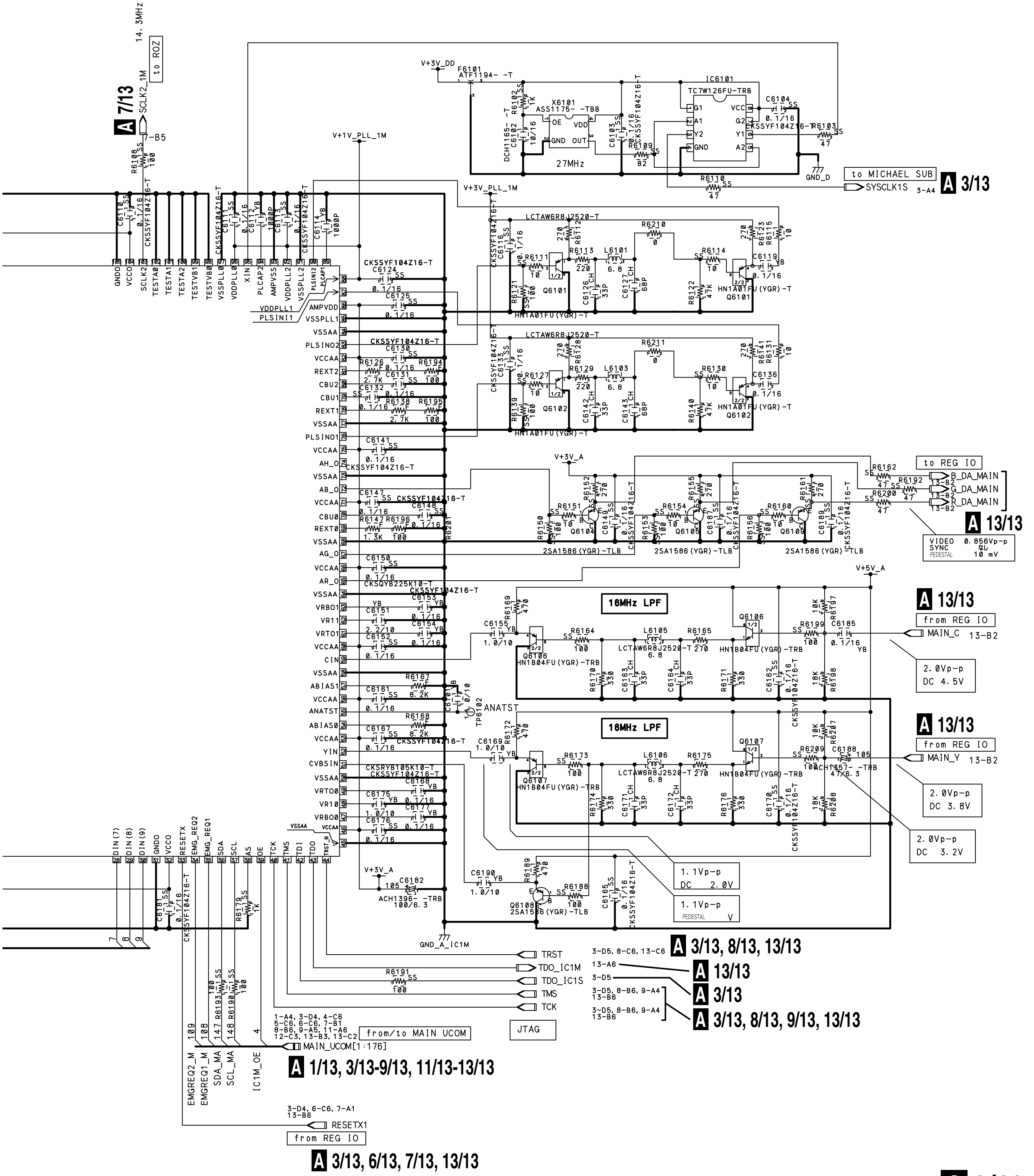
14.3MHz
to ROZ
A 7/13
SCLK2_1M
7-B5
R6108
V+1V_PLL_1M
V+3V_DD
F6101
ATF1194- -T
X6101
ASS1175- -TBB
OE
VDD
GND
OUT
27MHz
DCH1165- -T
C6102
10/16
R6102
1K
C6103
0.1/16
CKSSYF104Z16-T
R6109
82
IC6101
TC7W126FU-TRB
G1
A1
Y2
GND
VCC
G2
Y1
A2
C6104
0.1/16
CKSSYF104Z16-T
R6103
47
GND_D
R6110
47
to MICHAEL SUB
SYSCLK1S
3-A4
A 3/13
V+3V_PLL_1M
LCTAW6R8J2520-T
R6210
0
R6111
10
R6113
220
L6101
6.8
R6112
270
R6121
100
Q6101
C6126
33P
C6127
68P
R6122
47K
R6114
10
R6123
270
R6115
10
C6119
0.1/16
HN1A01FU(YGR)-T
Q6101
HN1A01FU(YGR)-T
R6211
0
R6127
10
R6129
220
L6103
6.8
R6128
270
R6139
100
Q6102
C6142
33P
C6143
68P
R6140
47K
R6130
10
R6141
270
R6131
10
C6136
0.1/16
HN1A01FU(YGR)-T
Q6102
HN1A01FU(YGR)-T
GNDO
VCCO
SCLK2
TESTA0
TESTA1
TESTA2
TESTVB1
TESTVB0
VSSPLL0
VDDPLL0
XIN
PLCAP2
AMPVSS
VDDPLL2
VSSPLL2
PLSINI2
PLCAP1
C6116
0.1/16
C6111
0.1/16
C6112
C6113
1000P
C6114
1000P
CKSSYF104Z16-T
C6124
0.1/16
C6125
0.1/16
VDDPLL1
PLSINI1
AMPVDD
VSSPLL1
VSSAA
PLSINO2
VCCAA
REXT2
CBU2
CBU1
REXT1
VSSAA
PLSINO1
VCCAA
AH_O
VSSAA
AB_O
VCCAA
CBU0
REXT0
VSSAA
AG_O
VCCAA
AR_O
VSSAA
VRBO1
VR11
VRTO1
VCCAA
CIN
VSSAA
ABIAS1
VCCAA
ANATST
ABIAS0
VCCAA
YIN
CVBSIN
VSSAA
VRTO0
VR10
VRBO0
VCCAA
C6130
0.1/16
R6126
2.7K
R6194
100
C6131
C6132
0.1/16
R6138
2.7K
R6195
100
C6141
0.1/16
C6147
0.1/16
C6148
0.1/16
R6147
1.3K
R6196
100
R6201
C6150
CKSQYB225K10-T
C6153
C6151
2.2/10
C6154
0.1/16
C6152
0.1/16
R6167
8.2K
C6161
0.1/16
C6101
0.1/10
TP6102
ANATST
R6168
8.2K
C6167
0.1/16
CKSRYB105K10-T
C6168
C6175
1.0/10
C6177
0.1/16
C6176
0.1/16
V+3V_A
R6152
270
R6151
10
R6150
100
Q6104
C6149
0.1/16
CKSSYF104Z16-T
R6155
270
R6154
10
R6153
100
Q6105
C6187
0.1/16
R6161
270
R6160
10
R6156
100
Q6109
C6189
0.1/16
2SA1586(YGR)-TLB
to REG IO
R6162
47
R6192
47
R6200
47
B_DA_MAIN
G_DA_MAIN
R_DA_MAIN
13-B2
A 13/13
VIDEO 0.856Vp-p
SYNC なし
PEDESTAL 10 mV
V+5V_A
16MHz LPF
R6169
470
C6155
1.0/10
R6164
100
L6105
6.8
LCTAW6R8J2520-T
R6165
270
Q6106
HN1B04FU(YGR)-TRB
R6197
10K
R6199
100
C6185
0.1/16
R6198
18K
R6170
330
C6163
33P
C6164
33P
R6171
330
C6162
0.1/16
from REG IO
MAIN_C
13-B2
2.0Vp-p
DC 4.5V
R6172
470
C6169
1.0/10
R6173
100
L6106
6.8
R6175
270
Q6107
HN1B04FU(YGR)-TRB
R6207
10K
R6209
100
C6188
ACH1367- -TRB
47/6.3
R6208
18K
R6174
330
C6171
33P
C6172
33P
R6176
330
C6170
0.1/16
MAIN_Y
2.0Vp-p
DC 3.8V
2.0Vp-p
DC 3.2V
1.1Vp-p
DC 2.0V
1.1Vp-p
PEDESTAL V
C6182
ACH1396- -TRB
100/6.3
C6190
1.0/10
R6189
470
R6186
100
Q6108
2SA1586(YGR)-TLB
C6165
0.1/16
GND_A_IC1M
DIN(7)
DIN(8)
DIN(9)
GNDO
VCCO
RESETX
EMG_REQ2
EMG_REQ1
SDA
SCL
AS
OE
TCK
TMS
TDI
TDO
TRST_N
C6181
0.1/16
R6179
1K
R6193
100
R6190
100
R6191
100
TRST
TDO_IC1M
TDO_IC1S
TMS
TCK
JTAG
3-D5, 8-C6, 13-C6
A 3/13, 8/13, 13/13
13-A6
A 13/13
3-D5
A 3/13
3-D5, 8-B6, 9-A4
13-B6
A 3/13, 8/13, 9/13, 13/13
1-A4, 3-D4, 4-C6
5-C6, 6-C6, 7-B1
8-B6, 9-A5, 11-A6
12-C3, 13-B3, 13-C2
from/to MAIN UCOM
MAIN_UCOM[1:176]
A 1/13, 3/13-9/13, 11/13-13/13
109
108
147
148
4
EMGREQ2_M
EMGREQ1_M
SDA_MA
SCL_MA
IC1M_OE
3-D4, 6-C6, 7-A1
13-B6
RESETX1
from REG IO
A 3/13, 6/13, 7/13, 13/13

A 2/13

3.5 MR MAIN BOARD ASSY (3/13)

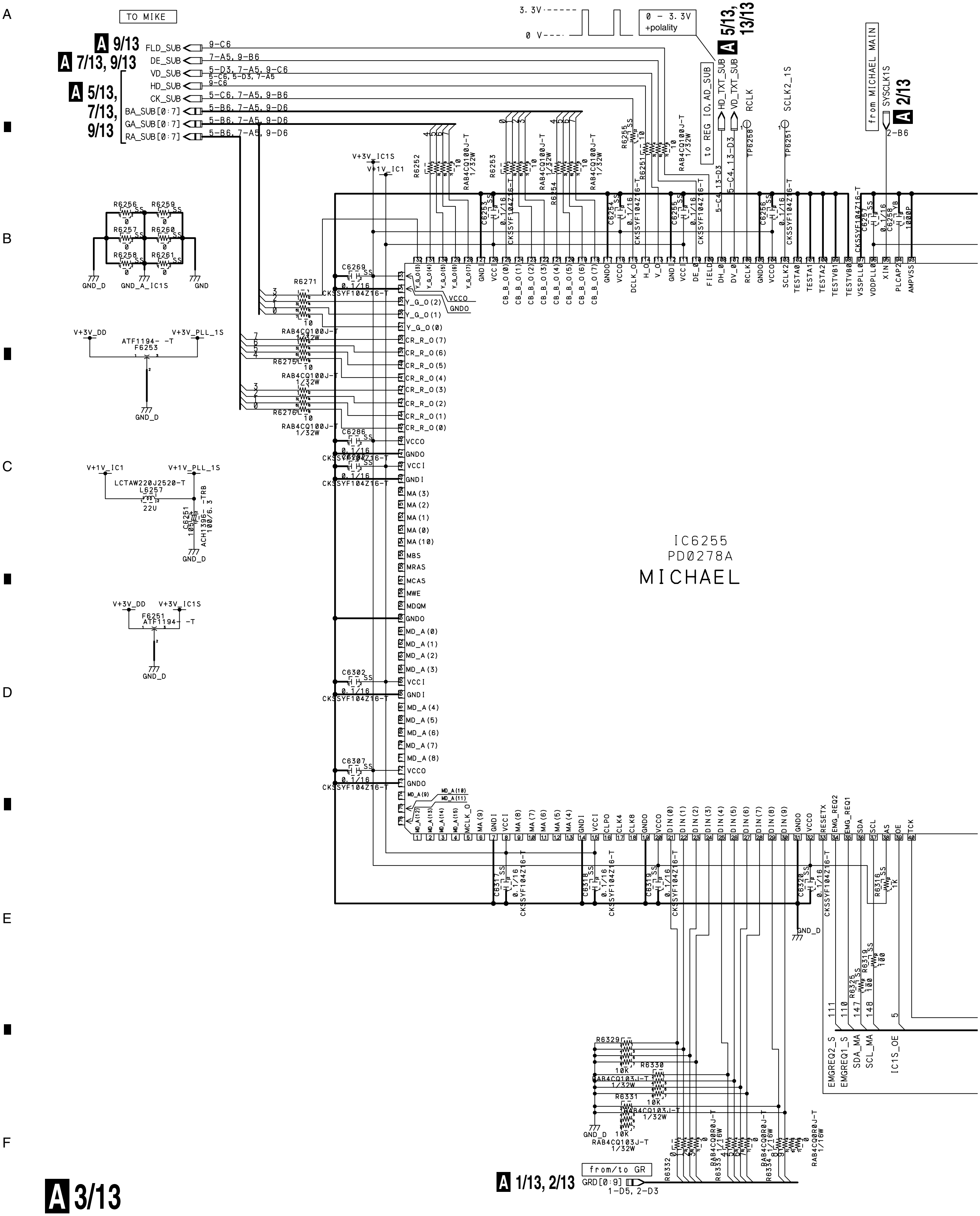

A
B
C
D
E
F
TO MIKE
A 9/13
A 7/13, 9/13
A 5/13, 7/13, 9/13
FLD_SUB
DE_SUB
VD_SUB
HD_SUB
CK_SUB
BA_SUB[0:7]
GA_SUB[0:7]
RA_SUB[0:7]
9-C6
7-A5, 9-B6
5-D3, 7-A5, 9-C6
5-C6, 5-D3, 7-A5, 9-C6
5-C6, 7-A5, 9-B6
5-B6, 7-A5, 9-D6
3.3V
0 V
0 - 3.3V +polality
A 5/13, 13/13
to REG IO, AD_SUB
HD_TXT_SUB
VD_TXT_SUB
RCLK
SCLK2_1S
TP6258
TP6251
5-C4, 13-D3
from MICHAEL MAIN
SYSCLK1S
A 2/13
2-B6
V+3V_IC1S
V+1V_IC1
R6252
R6253
R6254
R6255
R6251
RAB4CQ100J-T 1/32W 10
R6256
R6259
R6257
R6260
R6258
R6261
GND_D
GND_A_IC1S
GND
V+3V_DD
V+3V_PLL_1S
ATF1194- -T
F6253
V+1V_IC1
V+1V_PLL_1S
LCTAW220J2520-T
L6257
22U
C6251
ACH1396- -TRB
100/6.3
V+3V_DD
V+3V_IC1S
F6251
ATF1194- -T
C6253
C6254
C6255
C6256
C6257
C6258
1000P
C6269
C6286
C6302
C6307
C6317
C6318
C6319
C6320
CKSSYF104Z16-T
0.1/16
R6271
R6275
R6276
VCCO
GNDO
VCCI
GNDI
Y_G_O(3)
Y_G_O(4)
Y_G_O(5)
Y_G_O(6)
Y_G_O(7)
Y_G_O(2)
Y_G_O(1)
Y_G_O(0)
CR_R_O(7)
CR_R_O(6)
CR_R_O(5)
CR_R_O(4)
CR_R_O(3)
CR_R_O(2)
CR_R_O(1)
CR_R_O(0)
CB_B_O(0)
CB_B_O(1)
CB_B_O(2)
CB_B_O(3)
CB_B_O(4)
CB_B_O(5)
CB_B_O(6)
CB_B_O(7)
DCLK_O
H_O
V_O
DE_O
FIELD
DH_0
DV_0
SCLK2
TESTA0
TESTA1
TESTA2
TESTVB1
TESTVB0
VSSPLL0
VDDPLL0
XIN
PLCAP2
AMPVSS
MA(3)
MA(2)
MA(1)
MA(0)
MA(10)
MBS
MRAS
MCAS
MWE
MDQM
MD_A(0)
MD_A(1)
MD_A(2)
MD_A(3)
MD_A(4)
MD_A(5)
MD_A(6)
MD_A(7)
MD_A(8)
MD_A(9)
MD_A(10)
MD_A(11)
MD_A(12)
MD_A(13)
MD_A(14)
MD_A(15)
MCLK_O
MA(9)
MA(8)
MA(7)
MA(6)
MA(5)
MA(4)
CLPO
CLK4
CLK8
DIN(0)
DIN(1)
DIN(2)
DIN(3)
DIN(4)
DIN(5)
DIN(6)
DIN(7)
DIN(8)
DIN(9)
RESETX
EMG_REQ2
EMG_REQ1
SDA
SCL
AS
OE
TCK
IC6255
PD0278A
MICHAEL
R6316 1K
R6319 100
R6325 100
111
110
147
148
5
EMGREQ2_S
EMGREQ1_S
SDA_MA
SCL_MA
IC1S_OE
GND_D
R6329
R6330
R6331
10K
RAB4CQ103J-T 1/32W
R6332
R6333
R6334
RAB4CQ0R0J-T 1/16W 0
from/to GR
A 1/13, 2/13
GRD[0:9]
1-D5, 2-D3

A 3/13 MR MAIN BOARD ASSY (AWV2041)

● MICHAEL SUB BLOCK

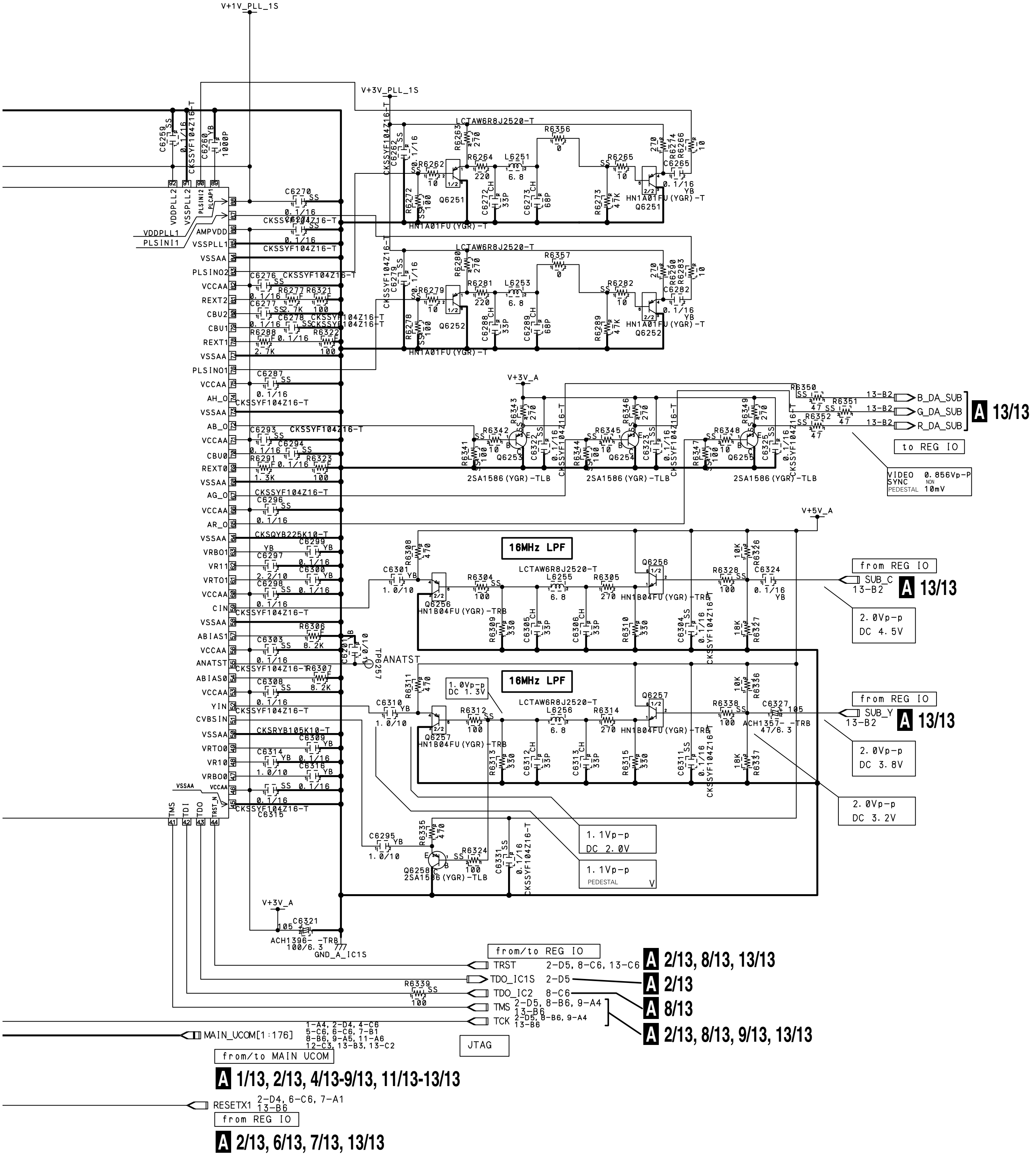

V+1V_PLL_1S
V+3V_PLL_1S
VDDPLL2
VSSPLL2
PLSINI2
PLCAP1
VDDPLL1
PLSINI1
AMPVDD
VSSPLL1
VSSAA
PLSINO2
VCCAA
REXT2
CBU2
CBU1
REXT1
PLSINO1
AH_O
AB_O
CBU0
REXT0
AG_O
AR_O
VRBO1
VR11
VRTO1
CIN
ABIAS1
ANATST
ABIAS0
YIN
CVBSIN
VRTO0
VR10
VRBO0
TMS
TDI
TDO
TRST_N
LCTAW6R8J2520-T
HN1A01FU(YGR)-T
Q6251
Q6252
Q6253
Q6254
Q6255
2SA1586(YGR)-TLB
V+3V_A
V+5V_A
B_DA_SUB
G_DA_SUB
R_DA_SUB
13-B2
A 13/13
to REG IO
VIDEO 0.856Vp-p
SYNC NON
PEDESTAL 10mV
16MHz LPF
Q6256
Q6257
HN1B04FU(YGR)-TRB
from REG IO
SUB_C
SUB_Y
2.0Vp-p DC 4.5V
2.0Vp-p DC 3.8V
2.0Vp-p DC 3.2V
1.0Vp-p DC 1.3V
1.1Vp-p DC 2.0V
1.1Vp-p PEDESTAL V
TP6257 ANATST
Q6258
2SA1586(YGR)-TLB
ACH1396- -TRB 100/6.3
ACH1357- -TRB 47/6.3
GND_A_IC1S
from/to REG IO
TRST 2-D5, 8-C6, 13-C6
A 2/13, 8/13, 13/13
TDO_IC1S 2-D5
A 2/13
TDO_IC2 8-C6
A 8/13
TMS 2-D5, 8-B6, 9-A4 13-B6
TCK 2-D5, 8-B6, 9-A4 13-B6
A 2/13, 8/13, 9/13, 13/13
JTAG
MAIN_UCOM[1:176]
1-A4, 2-D4, 4-C6 5-C6, 6-C6, 7-B1 8-B6, 9-A5, 11-A6 12-C3, 13-B3, 13-C2
from/to MAIN UCOM
A 1/13, 2/13, 4/13-9/13, 11/13-13/13
RESETX1
2-D4, 6-C6, 7-A1 13-B6
from REG IO
A 2/13, 6/13, 7/13, 13/13

A 3/13

3.6 MR MAIN BOARD ASSY (4/13)

A 4/13 MR MAIN BOARD ASSY (AWV2041)

● AD MAIN BLOCK

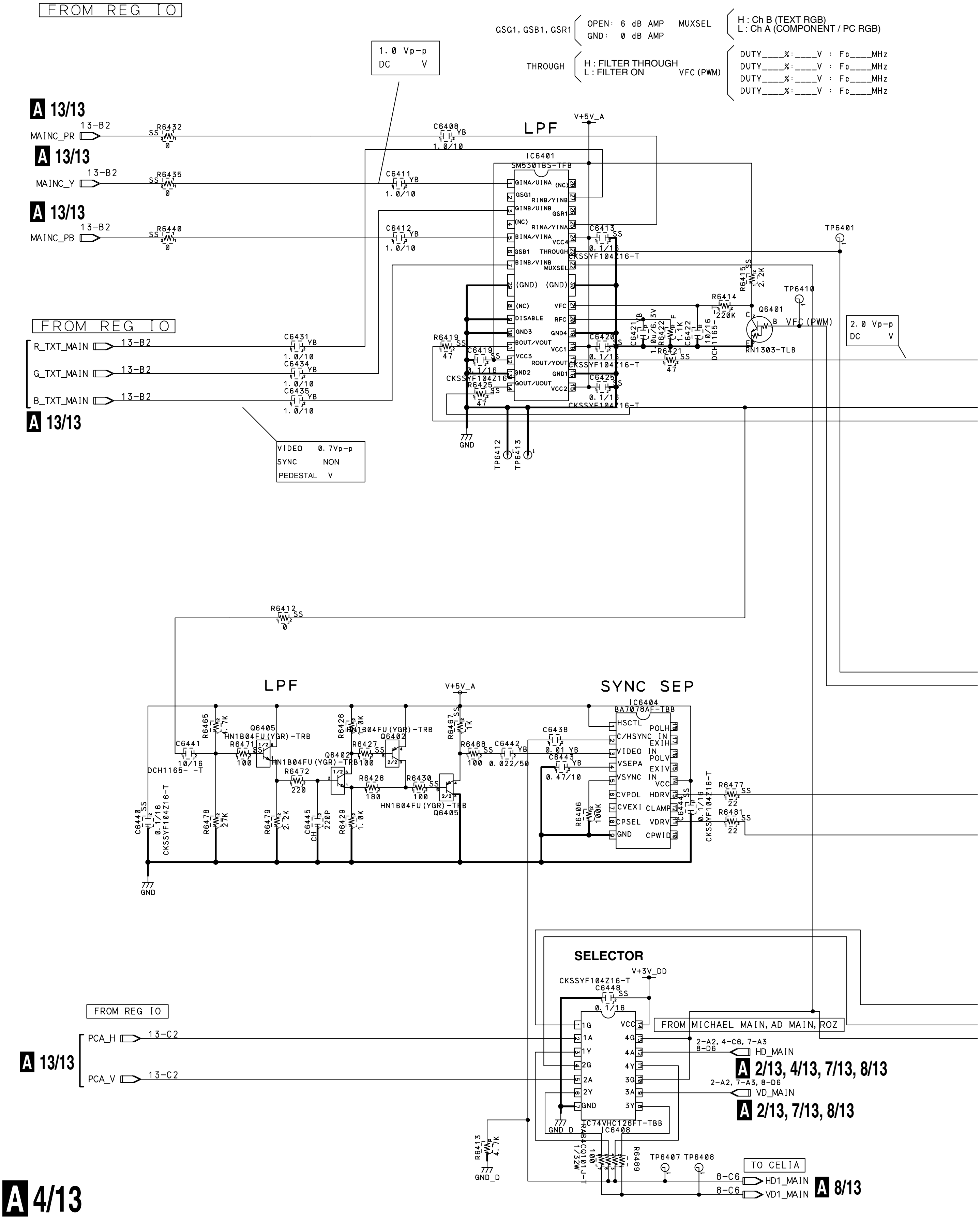
FROM REG IO
GSG1, GSB1, GSR1
OPEN: 6 dB AMP
GND: 0 dB AMP
MUXSEL
H : Ch B (TEXT RGB)
L : Ch A (COMPONENT / PC RGB)
THROUGH
H : FILTER THROUGH
L : FILTER ON
VFC (PWM)
DUTY____%:____V : Fc____MHz
DUTY____%:____V : Fc____MHz
DUTY____%:____V : Fc____MHz
DUTY____%:____V : Fc____MHz
1.0 Vp-p
DC V
A 13/13
MAINC_PR
13-B2
R6432 SS 0
A 13/13
MAINC_Y
13-B2
R6435 SS 0
A 13/13
MAINC_PB
13-B2
R6440 SS 0
C6408 YB 1.0/10
C6411 YB 1.0/10
C6412 YB 1.0/10
LPF
V+5V_A
IC6401
SM5301BS-TFB
GINA/UINA
(NC)
GSG1
RINB/YINB
GINB/UINB
GSR1
(NC)
RINA/YINA
BINA/VINA
VCC4
GSB1
THROUGH
BINB/VINB
MUXSEL
(GND)
(GND)
(NC)
VFC
DISABLE
RFC
GND3
GND4
BOUT/VOUT
VCC1
VCC3
ROUT/YOUT
GND2
GND1
GOUT/UOUT
VCC2
C6413 SS 0.1/16
CKSSYF104Z16-T
TP6401
R6415 SS 2.2K
TP6410
R6414 220K
Q6401
RN1303-TLB
VFC (PWM)
2.0 Vp-p
DC V
C6421 B 1.0u/6.3V
R6422 F 1.1K
C6422 B
DCH1165-
10/16
R6421 SS 47
C6420 SS 0.1/16
CKSSYF104Z16-T
C6425 SS 0.1/16
CKSSYF104Z16-T
R6419 SS 47
C6419 SS 0.1/16
CKSSYF104Z16-T
R6425 SS 47
GND
TP6412
TP6413
FROM REG IO
R_TXT_MAIN
13-B2
G_TXT_MAIN
13-B2
B_TXT_MAIN
13-B2
A 13/13
C6431 YB 1.0/10
C6434 YB 1.0/10
C6435 YB 1.0/10
VIDEO 0.7Vp-p
SYNC NON
PEDESTAL V
R6412 SS 0
LPF
V+5V_A
SYNC SEP
IC6404
BA7078AF-TBB
HSCTL
POLH
C/HSYNC IN
EXIH
VIDEO IN
POLV
VSEPA
EXIV
VSYNC IN
VCC
CVPOL
HDRV
CVEXI
CLAMP
CPSEL
VDRV
GND
CPWID
R6465 4.7K
Q6405
HN1B04FU(YGR)-TRB
R6471 SS 100
C6441
10/16
DCH1165- -T
R6472 220
Q6402
HN1B04FU(YGR)-TRB
R6426 10K
HN1B04FU(YGR)-TRB
Q6402
R6427 SS 100
R6428 180
R6430 SS 100
HN1B04FU(YGR)-TRB
Q6405
R6467 SS 1K
R6468 SS 100
C6442 YB 0.022/50
C6438 0.01 YB
C6443 YB 0.47/10
R6406 100K
C6444 SS 0.1/16
CKSSYF104Z16-T
R6477 SS 22
R6481 SS 22
C6440 SS 0.1/16
CKSSYF104Z16-T
R6478 27K
R6479 2.2K
C6445 CH 220P
R6429 1.0K
GND
SELECTOR
V+3V_DD
CKSSYF104Z16-T
C6448 SS 0.1/16
FROM REG IO
PCA_H
13-C2
PCA_V
13-C2
A 13/13
1G
VCC
1A
4G
1Y
4A
2G
4Y
2A
3G
2Y
3A
GND
3Y
GND_D
TC74VHC126FT-TBB
IC6408
FROM MICHAEL MAIN, AD MAIN, ROZ
2-A2, 4-C6, 7-A3
8-D6
HD_MAIN
A 2/13, 4/13, 7/13, 8/13
2-A2, 7-A3, 8-D6
VD_MAIN
A 2/13, 7/13, 8/13
R6413 4.7K
GND_D
RAB4CQ101J-T 1/32W 100
R6489
TP6407
TP6408
TO CELIA
8-C6
HD1_MAIN
8-C6
VD1_MAIN
A 8/13
A 4/13

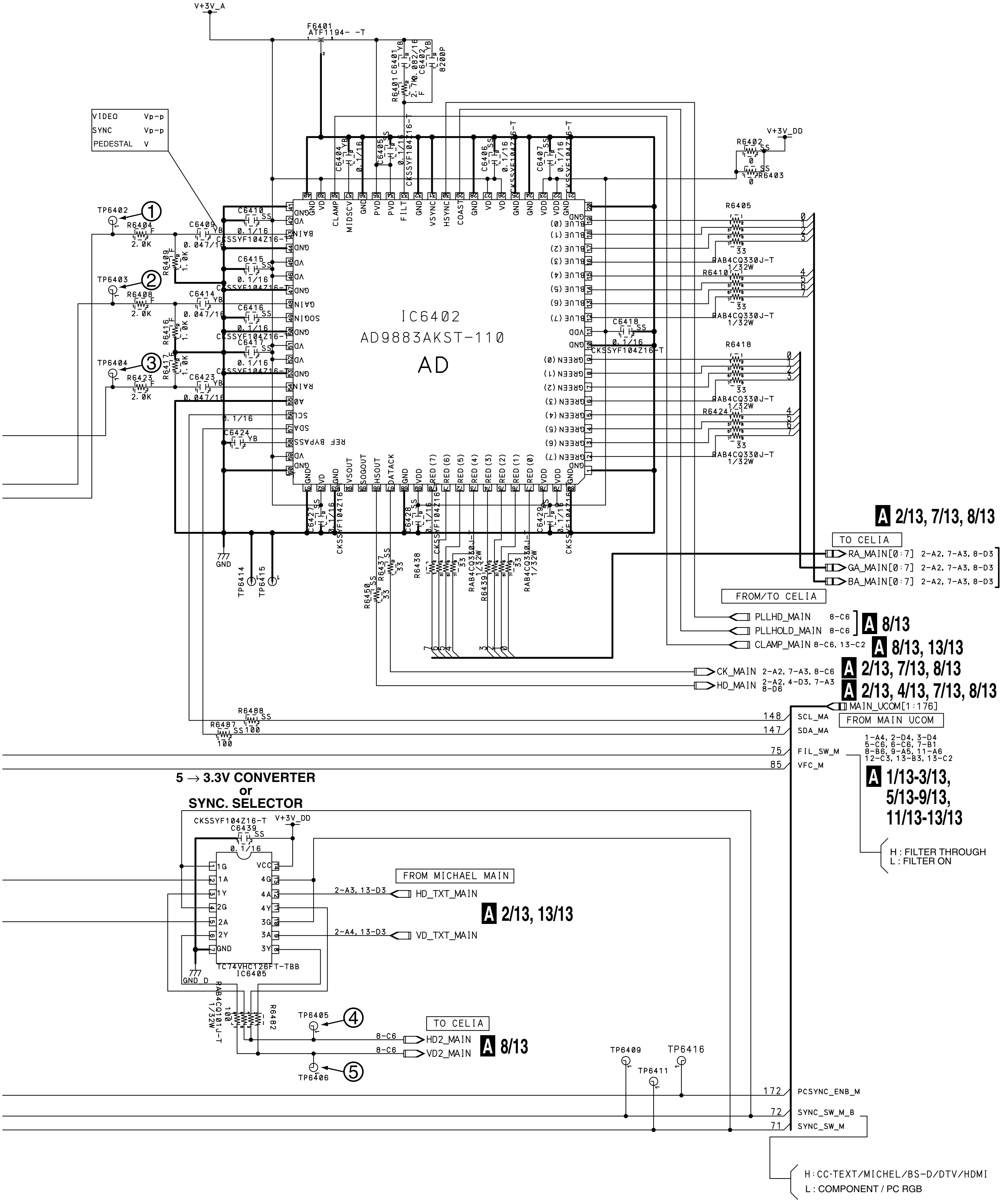
V+3V_A
F6401
ATF1194- -T
R6401 C6401 C6402
2.7 0.082/16 8200P
VIDEO Vp-p
SYNC Vp-p
PEDESTAL V
V+3V_DD
R6402 0
R6403 0
TP6402 ①
TP6403 ②
TP6404 ③
R6404 2.0K
R6408 2.0K
R6423 2.0K
R6409 1.0K
R6416 1.0K
R6417 1.0K
C6409 0.047/16
C6414 0.047/16
C6423 0.047/16
C6410 0.1/16
C6415 0.1/16
C6416 0.1/16
C6417 0.1/16
C6424
CKSSYF104Z16-T
IC6402
AD9883AKST-110
AD
BAIN
GAIN
SOGIN
RAIN
A0
SCL
SDA
REF BYPASS
CLAMP
MIDSCV
PVD
FILT
VSYNC
HSYNC
COAST
VSOUT
SOGOUT
HSOUT
DATACK
BLUE (0)
BLUE (7)
GREEN (0)
GREEN (7)
RED (7)
RED (0)
C6418 0.1/16
R6405
R6410
R6418
R6424
RAB4CQ330J-T 1/32W
33
C6427
C6428
C6429
GND
TP6414
TP6415
R6450 33
R6437 33
R6438
R6439
2/13, 7/13, 8/13
TO CELIA
RA_MAIN[0:7] 2-A2, 7-A3, 8-D3
GA_MAIN[0:7] 2-A2, 7-A3, 8-D3
BA_MAIN[0:7] 2-A2, 7-A3, 8-D3
FROM/TO CELIA
PLLHD_MAIN 8-C6
PLLHOLD_MAIN 8-C6
8/13
CLAMP_MAIN 8-C6, 13-C2
8/13, 13/13
CK_MAIN 2-A2, 7-A3, 8-C6
2/13, 7/13, 8/13
HD_MAIN 2-A2, 4-D3, 7-A3 8-D6
2/13, 4/13, 7/13, 8/13
MAIN_UCOM[1:176]
FROM MAIN UCOM
R6488 100
R6487 100
148 SCL_MA
147 SDA_MA
75 FIL_SW_M
85 VFC_M
1-A4, 2-D4, 3-D4
5-C6, 6-C6, 7-B1
8-B6, 9-A5, 11-A6
12-C3, 13-B3, 13-C2
1/13-3/13, 5/13-9/13, 11/13-13/13
H : FILTER THROUGH
L : FILTER ON
5 → 3.3V CONVERTER
or
SYNC. SELECTOR
CKSSYF104Z16-T
C6439 0.1/16
V+3V_DD
1G 1A 1Y 2G 2A 2Y GND
VCC 4G 4A 4Y 3G 3A 3Y
TC74VHC126FT-TBB
IC6405
GND_D
FROM MICHAEL MAIN
2-A3, 13-D3
HD_TXT_MAIN
2/13, 13/13
2-A4, 13-D3
VD_TXT_MAIN
RAB4CQ101J-T 1/32W
100
R6482
TP6405 ④
TP6406 ⑤
TO CELIA
8-C6 HD2_MAIN
8-C6 VD2_MAIN
8/13
TP6409
TP6411
TP6416
172 PCSYNC_ENB_M
72 SYNC_SW_M_B
71 SYNC_SW_M
H: CC·TEXT/MICHEL/BS-D/DTV/HDMI
L : COMPONENT / PC RGB

A 4/13

3.7 MR MAIN BOARD ASSY (5/13)

A 5/13 MR MAIN BOARD ASSY (AWV2041)

● AD SUB BLOCK

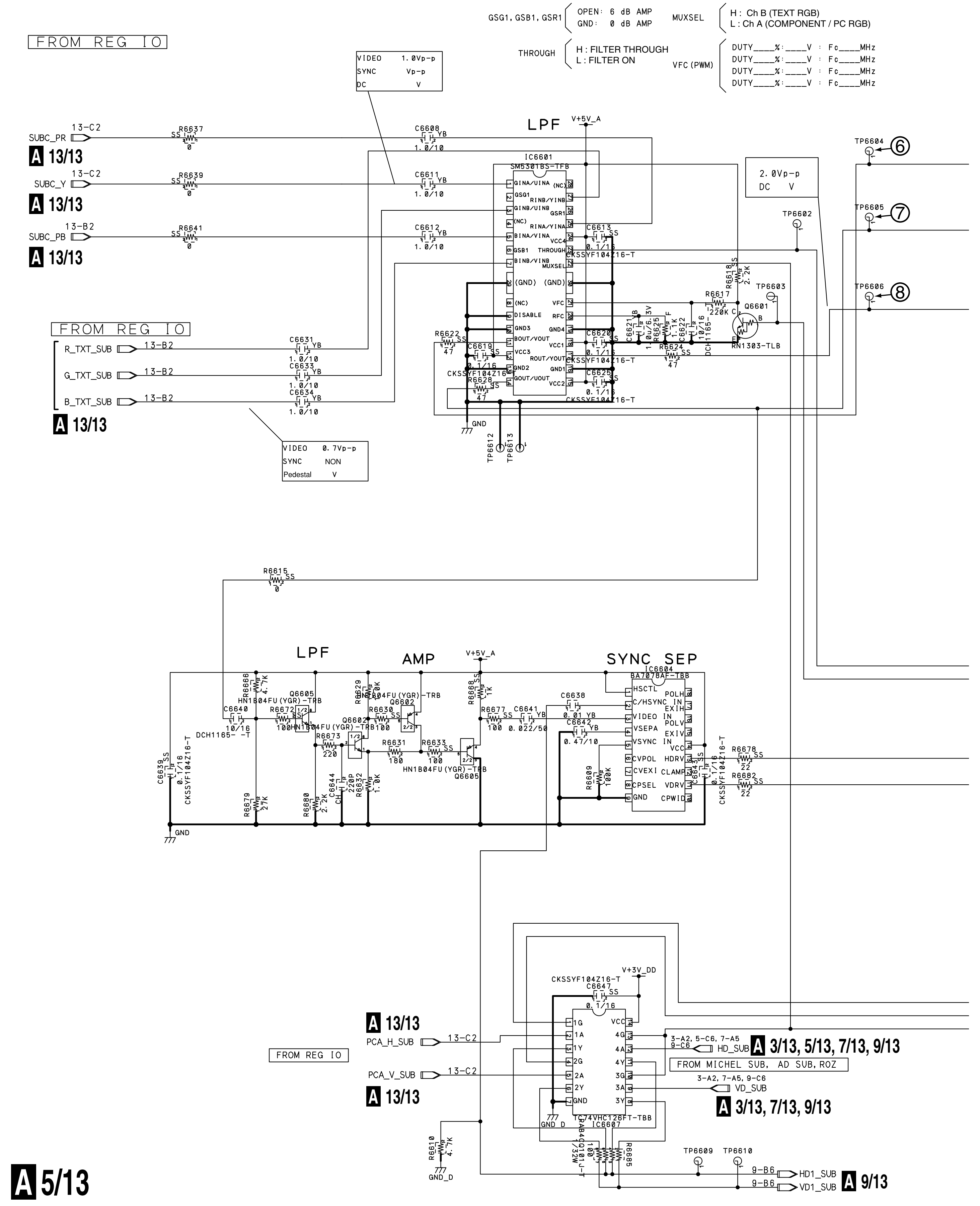

GSG1, GSB1, GSR1
OPEN: 6 dB AMP
GND: 0 dB AMP
MUXSEL
H : Ch B (TEXT RGB)
L : Ch A (COMPONENT / PC RGB)
THROUGH
H : FILTER THROUGH
L : FILTER ON
VFC (PWM)
DUTY____%:____V : Fc____MHz
FROM REG IO
VIDEO 1.0Vp-p
SYNC Vp-p
DC V
LPF
V+5V_A
SUBC_PR 13-C2
SUBC_Y 13-C2
SUBC_PB 13-B2
A 13/13
R6637 R6639 R6641
C6608 C6611 C6612 1.0/10
IC6601 SM5301BS-TFB
GINA/UINA GSG1 GINB/UINB RINB/YINB GSR1 RINA/YINA BINA/VINA GSB1 BINB/VINB VCC4 THROUGH MUXSEL (GND) (NC) DISABLE GND3 BOUT/VOUT VCC3 GND2 GOUT/UOUT VFC RFC GND4 VCC1 ROUT/YOUT GND1 VCC2
C6613 C6619 C6620 C6621 C6622 C6625 0.1/16 CKSSYF104Z16-T
R6617 220K R6618 2.2K R6622 47 R6624 47 R6625 1.1K R6628 47
Q6601 RN1303-TLB
TP6602 TP6603 TP6604 TP6605 TP6606 TP6612 TP6613
⑥ ⑦ ⑧
2.0Vp-p
DC V
R_TXT_SUB 13-B2
G_TXT_SUB 13-B2
B_TXT_SUB 13-B2
C6631 C6633 C6634 1.0/10
VIDEO 0.7Vp-p
SYNC NON
Pedestal V
GND
R6615 0
LPF
AMP
SYNC SEP
V+5V_A
IC6604 BA7078AF-TBB
HSCTL C/HSYNC VIDEO VSEPA VSYNC CVPOL CVEXI CPSEL GND POLH EXIH POLV EXIV VCC HDRV CLAMP VDRV CPWID
Q6605 HN1B04FU(YGR)-TRB
Q6602 HN1B04FU(YGR)-TRB
R6666 4.7K R6672 100 R6673 220 R6629 10K R6630 100 R6631 180 R6633 100 R6668 1K R6677 100 R6679 27K R6680 2.2K R6632 1.0K R6609 100K R6678 22 R6682 22
C6640 10/16 DCH1165- -T C6639 0.1/16 CKSSYF104Z16-T C6644 220P C6641 0.022/50 C6638 0.01 C6642 0.47/10 C6643 0.1/16
V+3V_DD
CKSSYF104Z16-T C6647 0.1/16
IC6607 TC74VHC126FT-TBB
1G 1A 1Y 2G 2A 2Y GND VCC 4G 4A 4Y 3G 3A 3Y
PCA_H_SUB 13-C2
PCA_V_SUB 13-C2
FROM REG IO
A 13/13
3-A2, 5-C6, 7-A5 9-C6 HD_SUB A 3/13, 5/13, 7/13, 9/13
FROM MICHEL SUB, AD SUB, ROZ
3-A2, 7-A5, 9-C6 VD_SUB A 3/13, 7/13, 9/13
R6610 4.7K GND_D
RAB4C101J-T 100 1/32W R6685
TP6609 TP6610
9-B6 HD1_SUB
9-B6 VD1_SUB A 9/13

A 5/13

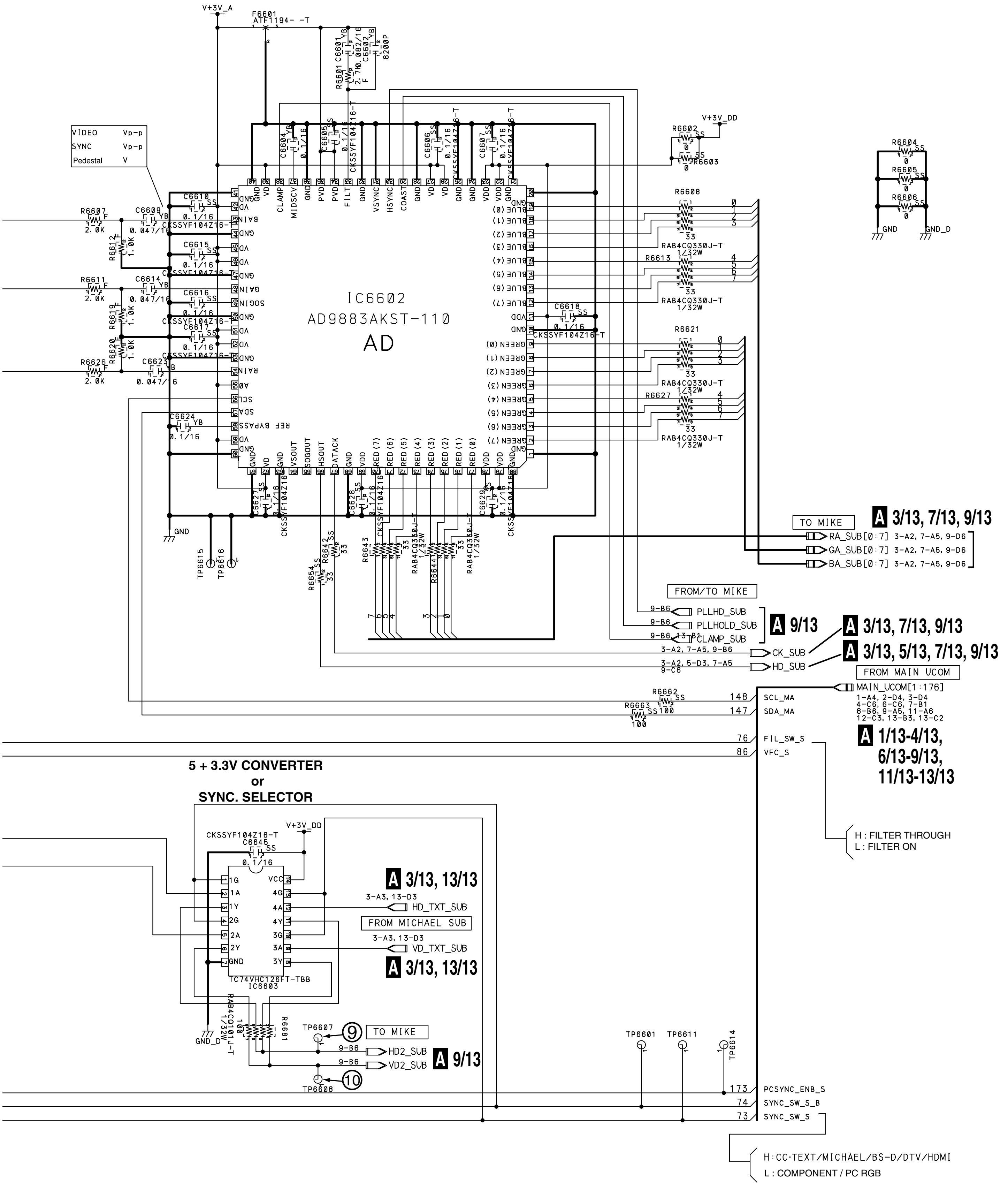

V+3V_A
F6601
ATF1194- -T
R6601 2.7
C6601 0.082/16 F
C6602 YB 8200P
VIDEO Vp-p
SYNC Vp-p
Pedestal V
IC6602
AD9883AKST-110
AD
C6604 0.1/16
C6605 0.1/16
CKSSYF104Z16-T
C6606 0.1/16
C6607 0.1/16
C6610 0.1/16
C6609 YB 0.047/16
R6607 2.0K
R6612 1.0K
C6615 0.1/16
C6614 YB 0.047/16
R6611 2.0K
C6616 0.1/16
R6619 1.0K
C6617 0.1/16
R6620 1.0K
C6623 YB 0.047/16
R6626 2.0K
C6624 YB 0.1/16
C6618 0.1/16
C6627 0.1/16
C6628 0.1/16
C6629 0.1/16
GND
TP6615
TP6616
R6654 33
R6642 33
R6643 33
R6644 33
RAB4CQ330J-T 1/32W
V+3V_DD
R6602 0
R6603 0
R6604 0
R6605 0
R6606 0
GND
GND_D
R6608 33
R6613 33
R6621 33
R6627 33
BLUE (0) – BLUE (7)
GREEN (0) – GREEN (7)
RED (0) – RED (7)
GND VD BAIN SOGIN GAIN RAIN A0 SCL SDA REF BYPASS
CLAMP MIDSCV PVD FILT VSYNC HSYNC COAST VDD
VSOUT SOGOUT HSOUT DATACK
TO MIKE
A 3/13, 7/13, 9/13
RA_SUB[0:7] 3-A2, 7-A5, 9-D6
GA_SUB[0:7] 3-A2, 7-A5, 9-D6
BA_SUB[0:7] 3-A2, 7-A5, 9-D6
FROM/TO MIKE
9-B6 PLLHD_SUB
9-B6 PLLHOLD_SUB
9-B6, 13-B1 CLAMP_SUB
A 9/13
3-A2, 7-A5, 9-B6 CK_SUB
A 3/13, 7/13, 9/13
3-A2, 5-D3, 7-A5, 9-C6 HD_SUB
A 3/13, 5/13, 7/13, 9/13
FROM MAIN UCOM
MAIN_UCOM[1:176]
1-A4, 2-D4, 3-D4
4-C6, 6-C6, 7-B1
8-B6, 9-A5, 11-A6
12-C3, 13-B3, 13-C2
A 1/13-4/13, 6/13-9/13, 11/13-13/13
R6662 100
R6663 100
148 SCL_MA
147 SDA_MA
76 FIL_SW_S
86 VFC_S
H : FILTER THROUGH
L : FILTER ON
5 + 3.3V CONVERTER
or
SYNC. SELECTOR
CKSSYF104Z16-T
C6645 0.1/16
V+3V_DD
1G 1A 1Y 2G 2A 2Y GND
VCC 4G 4A 4Y 3G 3A 3Y
TC74VHC126FT-TBB
IC6603
A 3/13, 13/13
3-A3, 13-D3 HD_TXT_SUB
FROM MICHAEL SUB
3-A3, 13-D3 VD_TXT_SUB
A 3/13, 13/13
RAB4CQ101J-T 1/32W 100
R6681
GND_D
TP6607
⑨ TO MIKE
9-B6 HD2_SUB
9-B6 VD2_SUB
A 9/13
⑩
TP6608
TP6601
TP6611
TP6614
173 PCSYNC_ENB_S
74 SYNC_SW_S_B
73 SYNC_SW_S
H:CC·TEXT/MICHAEL/BS-D/DTV/HDMI
L : COMPONENT / PC RGB

3.8 MR MAIN BOARD ASSY (6/13)

A 6/13 MR MAIN BOARD ASSY (AWV2041)

● HDMI RX BLOCK

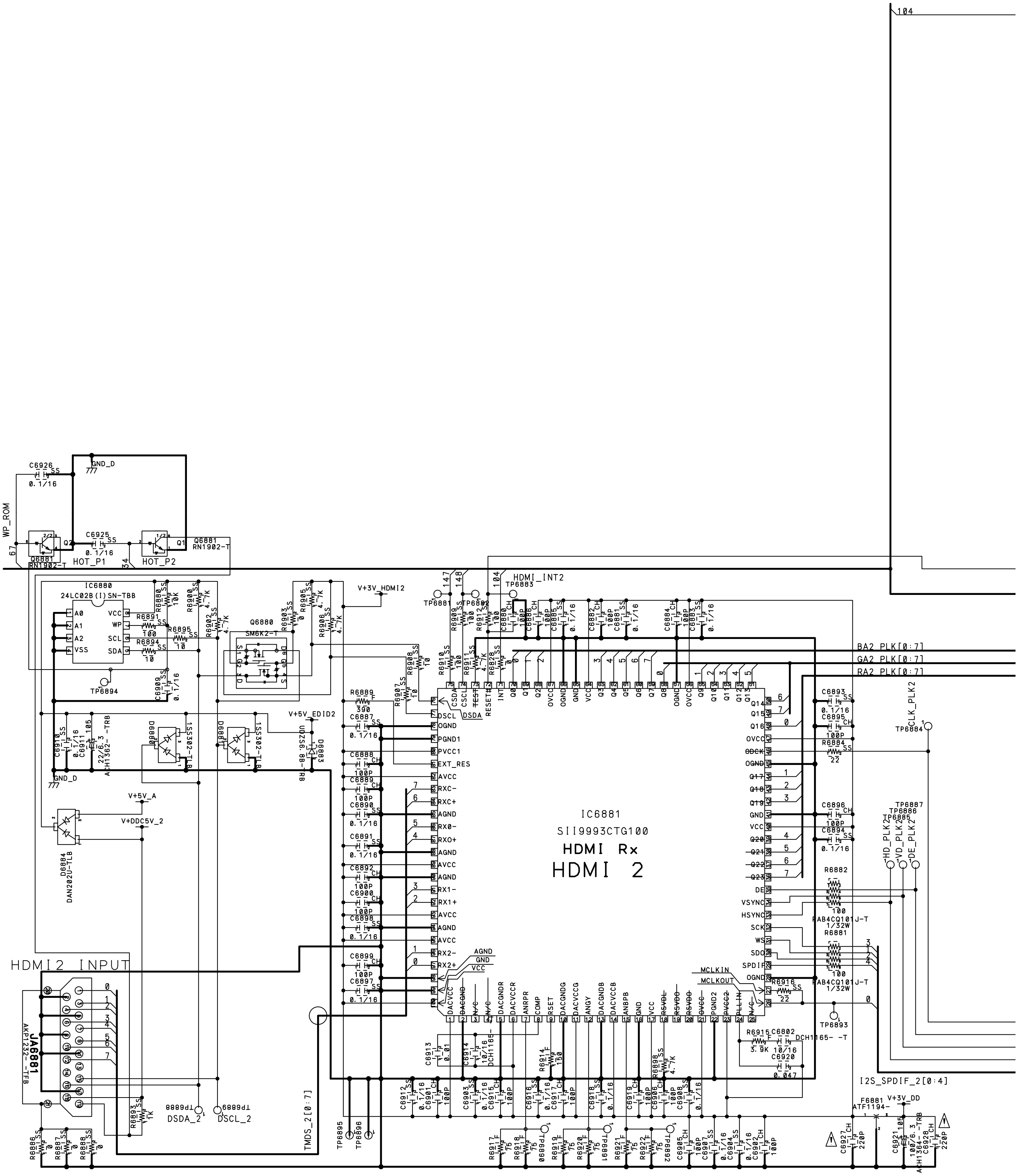

104
HDMI_INT2
TP6883
TP6881
TP6882
147
148
V+3V_HDMI2
V+5V_EDID2
V+5V_A
V+DDC5V_2
GND_D
WP_ROM
C6926 0.1/16
C6925 0.1/16
Q6881 RN1902-T
HOT_P1
HOT_P2
IC6880 24LC02B(I)SN-TBB
A0 A1 A2 VSS VCC WP SCL SDA
R6891 100
R6895 10
R6894 10
TP6894
Q6880 SM6K2-T
D6880 1SS302-TLB
D6881 1SS302-TLB
D6883 UDZS6.8B-TRB
D6884 DAN202U-TLB
C6911 22/6.3 ACH1362-TRB
IC6881
SII9993CTG100
HDMI Rx
HDMI 2
BA2_PLK[0:7]
GA2_PLK[0:7]
RA2_PLK[0:7]
CLK_PLK2
TP6884
HD_PLK2
VD_PLK2
DE_PLK2
TP6885 TP6886 TP6887
R6884 22
R6882 RAB4CQ101J-T 1/32W
R6881 RAB4CQ101J-T 1/32W
R6916 22
TP6893
I2S_SPDIF_2[0:4]
V+3V_DD
F6881 ATF1194-
C6927 220P
C6928 220P
ACH1364-TRB
HDMI2 INPUT
JA6881 AKP1232-TFB
R6893 1K
TP6888 DSDA_2
TP6889 DSCL_2
TMDS_2[0:7]
TP6895
TP6896
R6886 0
R6887 0
R6888 0
R6915 3.9K
C6802 10/16
DCH1165-T
C6920 0.047
R6917 75
R6918 75
R6919 75
R6920 75
R6921 75
R6922 75
TP6890
TP6891
TP6892
CSDA CSCL TEST RESET# INT
DSCL DSDA OGND PGND1 PVCC1 EXT_RES AVCC RXC- RXC+ AGND RX0- RX0+ AGND AVCC AGND RX1- RX1+ AVCC AGND AVCC RX2- RX2+
DACVCC DACGND N/C N/C DACGNDR DACVCCR ANRPR COMP RSET DACGNDG DACVCCG ANGY DACGNDB DACVCCB ANBPB GND VCC RSVDL RSVDO OVCC PGND2 PVCC2 PLLIN N/C
Q14 Q15 Q16 OVCC ODCK OGND Q17 Q18 Q19 GND VCC Q20 Q21 Q22 Q23 DE VSYNC HSYNC SCK WS SD0 SPDIF OGND
MCLKIN MCLKOUT
AGND GND VCC

A 6/13

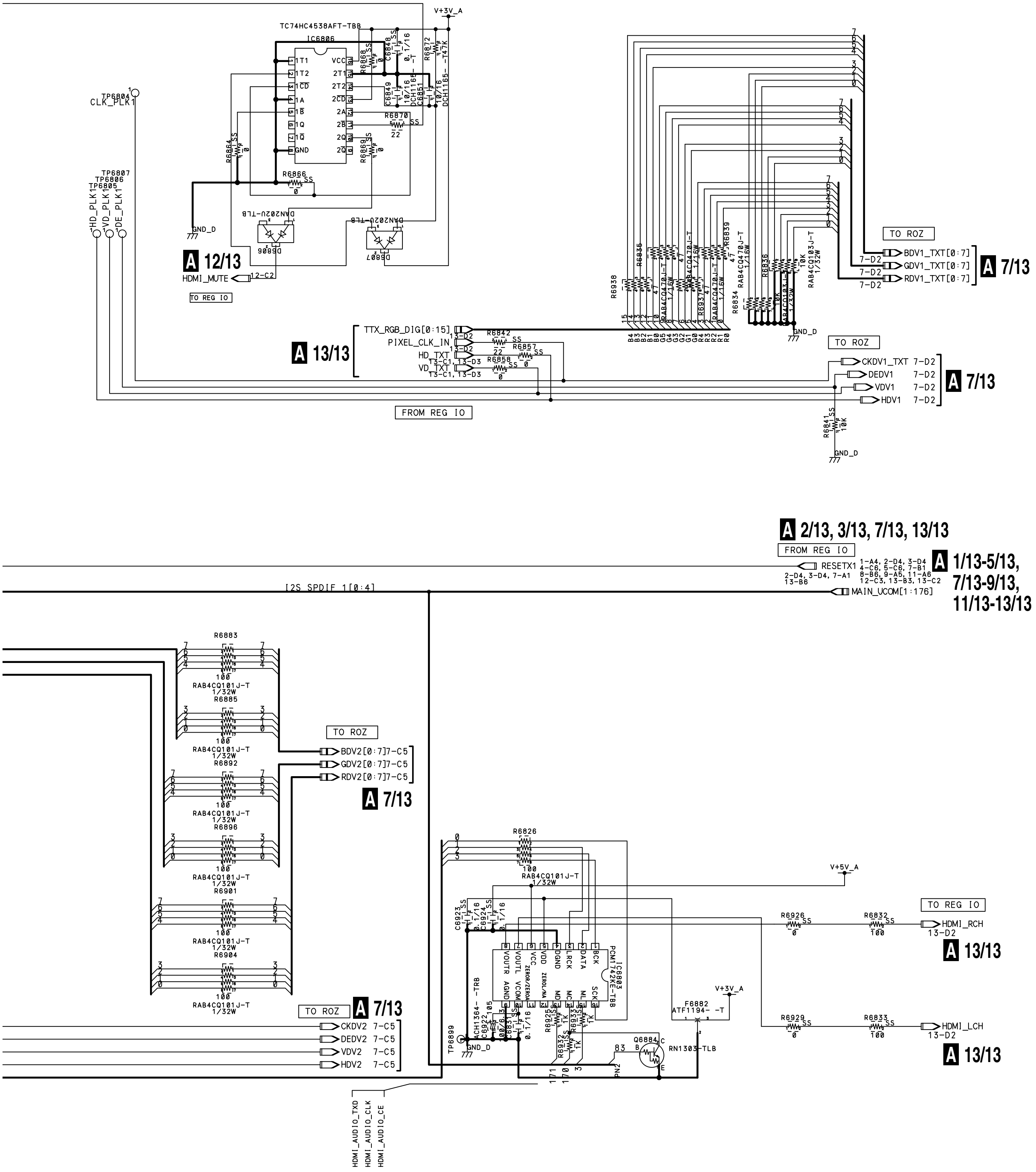
TC74HC4538AFT-TBB
IC6806
1T1
1T2
1CD
1A
1B
1Q
1Q
GND
VCC
2T1
2T2
2CD
2A
2B
2Q
2Q
V+3V_A
C6848
0.1/16
R6868
R6872
C6849
10/16
DCH1165-
C6851
R6870
22
R6864
R6869
R6866
0
TP6804
CLK_PLK1
TP6807
TP6806
TP6805
HD_PLK1
VD_PLK1
DE_PLK1
GND_D
DAN202U-TLB
D6806
D6807
A 12/13
HDMI_MUTE
12-C2
TO REG IO
A 13/13
TTX_RGB_DIG[0:15]
PIXEL_CLK_IN
HD_TXT
VD_TXT
13-D2
13-C1, 13-D3
R6842
22
R6857
R6858
SS
FROM REG IO
R6938
R6836
R6837
R6839
R6834
RAB4CQ470J-T
1/16W
47
RAB4CQ103J-T
1/32W
10K
B4 B3 B2 B1 B0 G5 G4 G3 G2 G1 G0 R4 R3 R2 R1 R0
TO ROZ
BDV1_TXT[0:7]
GDV1_TXT[0:7]
RDV1_TXT[0:7]
7-D2
A 7/13
CKDV1_TXT 7-D2
DEDV1 7-D2
VDV1 7-D2
HDV1 7-D2
R6841
10K
A 2/13, 3/13, 7/13, 13/13
FROM REG IO
RESETX1
2-D4, 3-D4, 7-A1
13-B6
1-A4, 2-D4, 3-D4
4-C6, 5-C6, 7-B1
8-B6, 9-A5, 11-A6
12-C3, 13-B3, 13-C2
A 1/13-5/13, 7/13-9/13, 11/13-13/13
I2S_SPDIF_1[0:4]
MAIN_UCOM[1:176]
R6883
R6885
R6892
R6896
R6901
R6904
100
RAB4CQ101J-T
1/32W
TO ROZ
BDV2[0:7] 7-C5
GDV2[0:7] 7-C5
RDV2[0:7] 7-C5
A 7/13
CKDV2 7-C5
DEDV2 7-C5
VDV2 7-C5
HDV2 7-C5
R6826
V+5V_A
C6923
C6924
C6921
C6922
105
0.1/16
ACH1364- -TRB
TP6899
PCM1742KE-TBB
IC6803
VOUTR
VOUTL
VCC
VDD
DGND
LRCK
DATA
BCK
AGND
VCOM
ZEROR/ZEROA
ZEROL/NA
MD
MC
ML
SCK
R6925
R6932
R6933
1K
F6882
ATF1194- -T
V+3V_A
Q6884
RN1303-TLB
B C E
83
171
170
3
R6926
R6832
R6929
R6833
100
TO REG IO
HDMI_RCH
HDMI_LCH
13-D2
A 13/13
HDMI_AUDIO_TXD
HDMI_AUDIO_CLK
HDMI_AUDIO_CE

A 6/13

3.9 MR MAIN BOARD ASSY (7/13)

A 7/13 MR MAIN BOARD ASSY (AWV2041)

● ROZ BLOCK

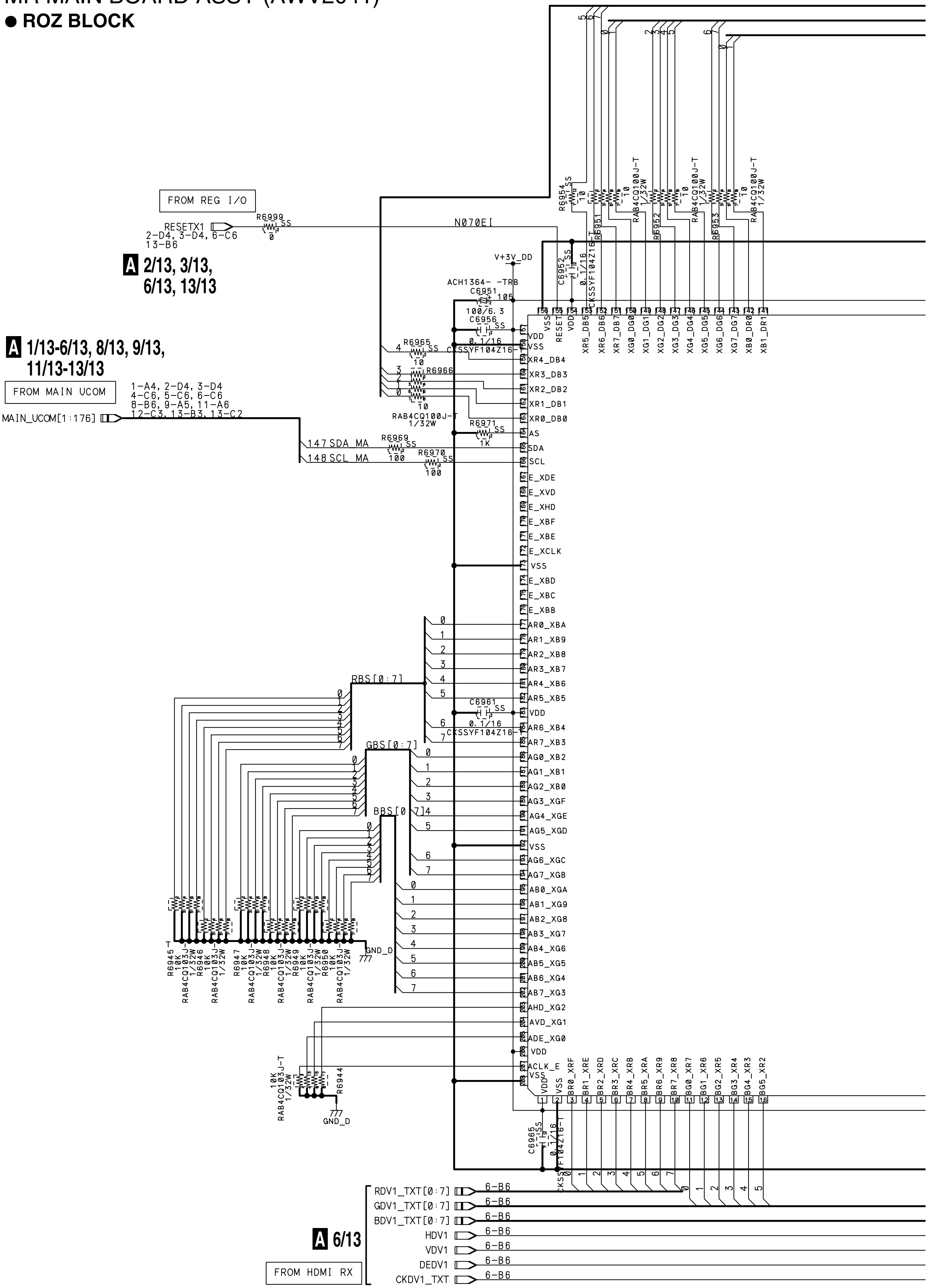
FROM REG I/O
RESETX1
2-D4, 3-D4, 6-C6
13-B6
A 2/13, 3/13, 6/13, 13/13
R6999 SS 0
N070EI
A 1/13-6/13, 8/13, 9/13, 11/13-13/13
FROM MAIN UCOM
1-A4, 2-D4, 3-D4
4-C6, 5-C6, 6-C6
8-B6, 9-A5, 11-A6
12-C3, 13-B3, 13-C2
MAIN_UCOM[1:176]
147 SDA_MA
148 SCL_MA
R6969 SS 100
R6970 SS 100
R6965 SS 10
R6966 10
RAB4CQ100J-T 1/32W
R6971 SS 1K
V+3V_DD
ACH1364- -TRB
C6951 105 100/6.3
C6956 SS 0.1/16 CKSSYF104Z16-T
C6952 SS 0.1/16 CKSSYF104Z16-T
R6954 SS 10
R6951 RAB4CQ100J-T 1/32W 10
R6952 RAB4CQ100J-T 1/32W 10
R6953 RAB4CQ100J-T 1/32W 10
VSS RESET VDD XR5_DB5 XR6_DB6 XR7_DB7 XG0_DG0 XG1_DG1 XG2_DG2 XG3_DG3 XG4_DG4 XG5_DG5 XG6_DG6 XG7_DG7 XB0_DR0 XB1_DR1
VDD VSS XR4_DB4 XR3_DB3 XR2_DB2 XR1_DB1 XR0_DB0 AS SDA SCL E_XDE E_XVD E_XHD E_XBF E_XBE E_XCLK VSS E_XBD E_XBC E_XBB AR0_XBA AR1_XB9 AR2_XB8 AR3_XB7 AR4_XB6 AR5_XB5 VDD AR6_XB4 AR7_XB3 AG0_XB2 AG1_XB1 AG2_XB0 AG3_XGF AG4_XGE AG5_XGD VSS AG6_XGC AG7_XGB AB0_XGA AB1_XG9 AB2_XG8 AB3_XG7 AB4_XG6 AB5_XG5 AB6_XG4 AB7_XG3 AHD_XG2 AVD_XG1 ADE_XG0 VDD ACLK_E VSS
C6961 SS 0.1/16 CKSSYF104Z16-T
RBS[0:7]
GBS[0:7]
BBS[0:7]
GND_D
R6945 10K RAB4CQ103J-T 1/32W
R6946 10K RAB4CQ103J-T 1/32W
R6947 10K RAB4CQ103J-T 1/32W
R6948 10K RAB4CQ103J-T 1/32W
R6949 10K RAB4CQ103J-T 1/32W
R6950 10K RAB4CQ103J-T 1/32W
R6944 10K RAB4CQ103J-T 1/32W
GND_D
VDD VSS BR0_XRF BR1_XRE BR2_XRD BR3_XRC BR4_XRB BR5_XRA BR6_XR9 BR7_XR8 BG0_XR7 BG1_XR6 BG2_XR5 BG3_XR4 BG4_XR3 BG5_XR2
C6965 SS 0.1/16 CKSSYF104Z16-T
RDV1_TXT[0:7] 6-B6
GDV1_TXT[0:7] 6-B6
BDV1_TXT[0:7] 6-B6
HDV1 6-B6
VDV1 6-B6
DEDV1 6-B6
CKDV1_TXT 6-B6
A 6/13
FROM HDMI RX

A 7/13

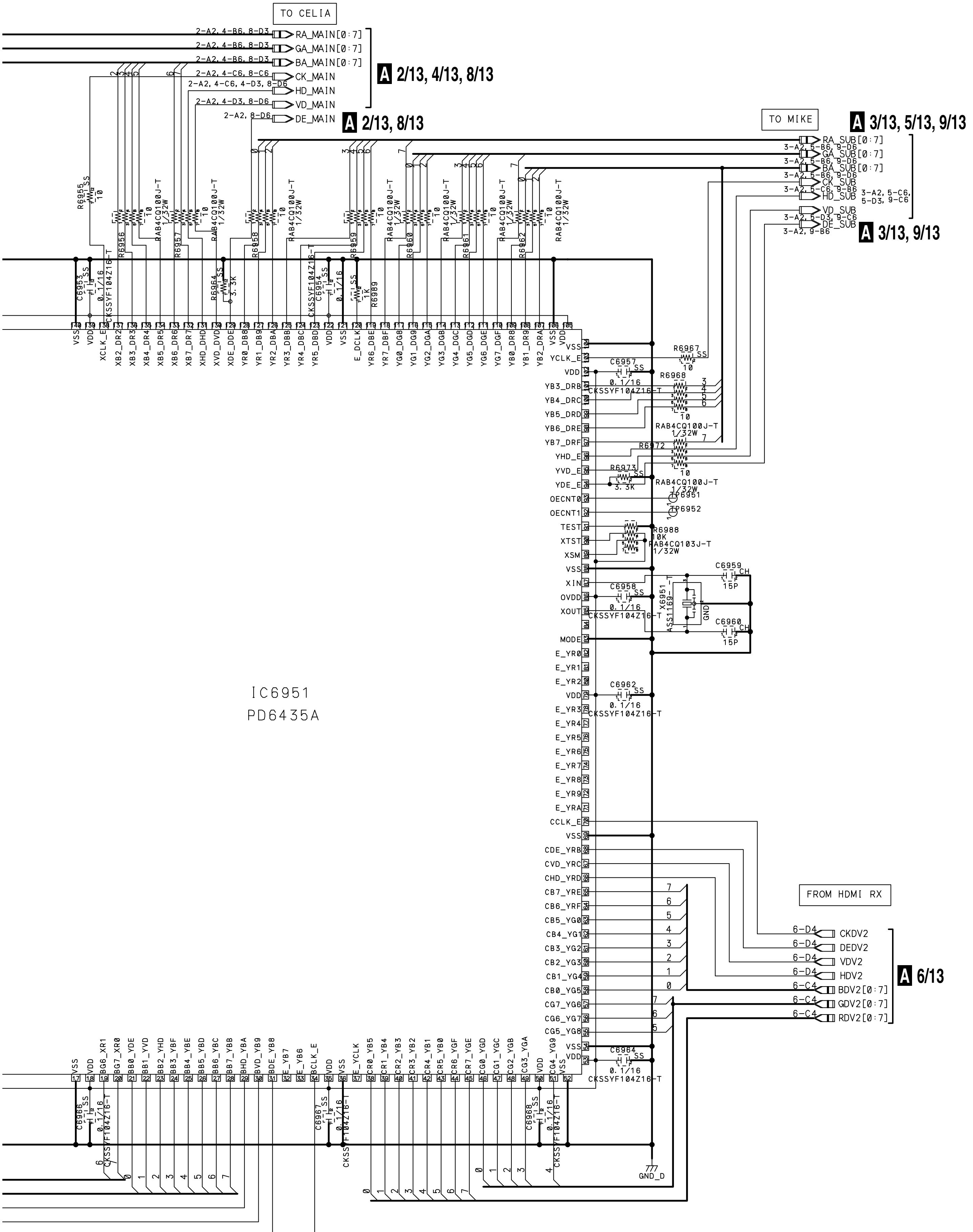
TO CELIA
RA_MAIN[0:7]
GA_MAIN[0:7]
BA_MAIN[0:7]
CK_MAIN
HD_MAIN
VD_MAIN
DE_MAIN
2-A2, 4-B6, 8-D3
2-A2, 4-C6, 8-C6
2-A2, 4-C6, 4-D3, 8-D6
2-A2, 4-D3, 8-D6
2-A2, 8-D6
A 2/13, 4/13, 8/13
A 2/13, 8/13
TO MIKE
A 3/13, 5/13, 9/13
RA_SUB[0:7]
GA_SUB[0:7]
BA_SUB[0:7]
CK_SUB
HD_SUB
VD_SUB
DE_SUB
3-A2, 5-B6, 9-D6
3-A2, 5-C6, 9-B6
3-A2, 5-C6, 5-D3, 9-C6
3-A2, 5-D3, 9-C6
3-A2, 9-B6
A 3/13, 9/13
R6955 SS 1/16 10
R6956
R6957
R6958
R6959
R6960
R6961
R6962
RAB4CQ100J-T 1/32W 10
R6964 SS 3.3K
R6989 SS 1K
C6953 SS 0.1/16 CKSSYF104Z16-T
C6954 SS 0.1/16 CKSSYF104Z16-T
VSS VDD XCLK_E XB2_DR2 XB3_DR3 XB4_DR4 XB5_DR5 XB6_DR6 XB7_DR7 XHD_DHD XVD_DVD XDE_DDE YR0_DB8 YR1_DB9 YR2_DBA YR3_DBB YR4_DBC YR5_DBD VDD VSS E_DCLK YR6_DBE YR7_DBF YG0_DG8 YG1_DG9 YG2_DGA YG3_DGB YG4_DGC YG5_DGD YG6_DGE YG7_DGF YB0_DR8 YB1_DR9 YB2_DRA VSS VDD
VSS YCLK_E VDD YB3_DRB YB4_DRC YB5_DRD YB6_DRE YB7_DRF YHD_E YVD_E YDE_E OECNT0 OECNT1 TEST XTST XSM VSS XIN OVDD XOUT MODE E_YR0 E_YR1 E_YR2 VDD E_YR3 E_YR4 E_YR5 E_YR6 E_YR7 E_YR8 E_YR9 E_YRA CCLK_E VSS CDE_YRB CVD_YRC CHD_YRD CB7_YRE CB6_YRF CB5_YG0 CB4_YG1 CB3_YG2 CB2_YG3 CB1_YG4 CB0_YG5 CG7_YG6 CG6_YG7 CG5_YG8 VSS VDD
R6967 SS 10
C6957 SS 0.1/16 CKSSYF104Z16-T
R6968 RAB4CQ100J-T 1/32W 10
R6972 RAB4CQ100J-T 1/32W 10
R6973 SS 3.3K
TP6951
TP6952
R6988 10K RAB4CQ103J-T 1/32W
C6959 CH 15P
C6960 CH 15P
C6958 SS 0.1/16 CKSSYF104Z16-T
X6951 ASS1169-T GND
C6962 SS 0.1/16 CKSSYF104Z16-T
IC6951
PD6435A
FROM HDMI RX
CKDV2
DEDV2
VDV2
HDV2
BDV2[0:7]
GDV2[0:7]
RDV2[0:7]
6-D4
6-C4
A 6/13
C6964 SS 0.1/16 CKSSYF104Z16-T
VSS VDD BG6_XR1 BG7_XR0 BB0_YDE BB1_YVD BB2_YHD BB3_YBF BB4_YBE BB5_YBD BB6_YBC BB7_YBB BHD_YBA BVD_YB9 BDE_YB8 E_YB7 E_YB6 BCLK_E VDD VSS E_YCLK CR0_YB5 CR1_YB4 CR2_YB3 CR3_YB2 CR4_YB1 CR5_YB0 CR6_YGF CR7_YGE CG0_YGD CG1_YGC CG2_YGB CG3_YGA VDD CG4_YG9 VSS
C6966 SS 0.1/16 CKSSYF104Z16-T
C6967 SS 0.1/16 CKSSYF104Z16-T
C6968 SS 0.1/16 CKSSYF104Z16-T
GND_D

A 7/13

3.10 MR MAIN BOARD ASSY (8/13)

A 8/13 MR MAIN BOARD ASSY (AWV2041)

● CELIA BLOCK

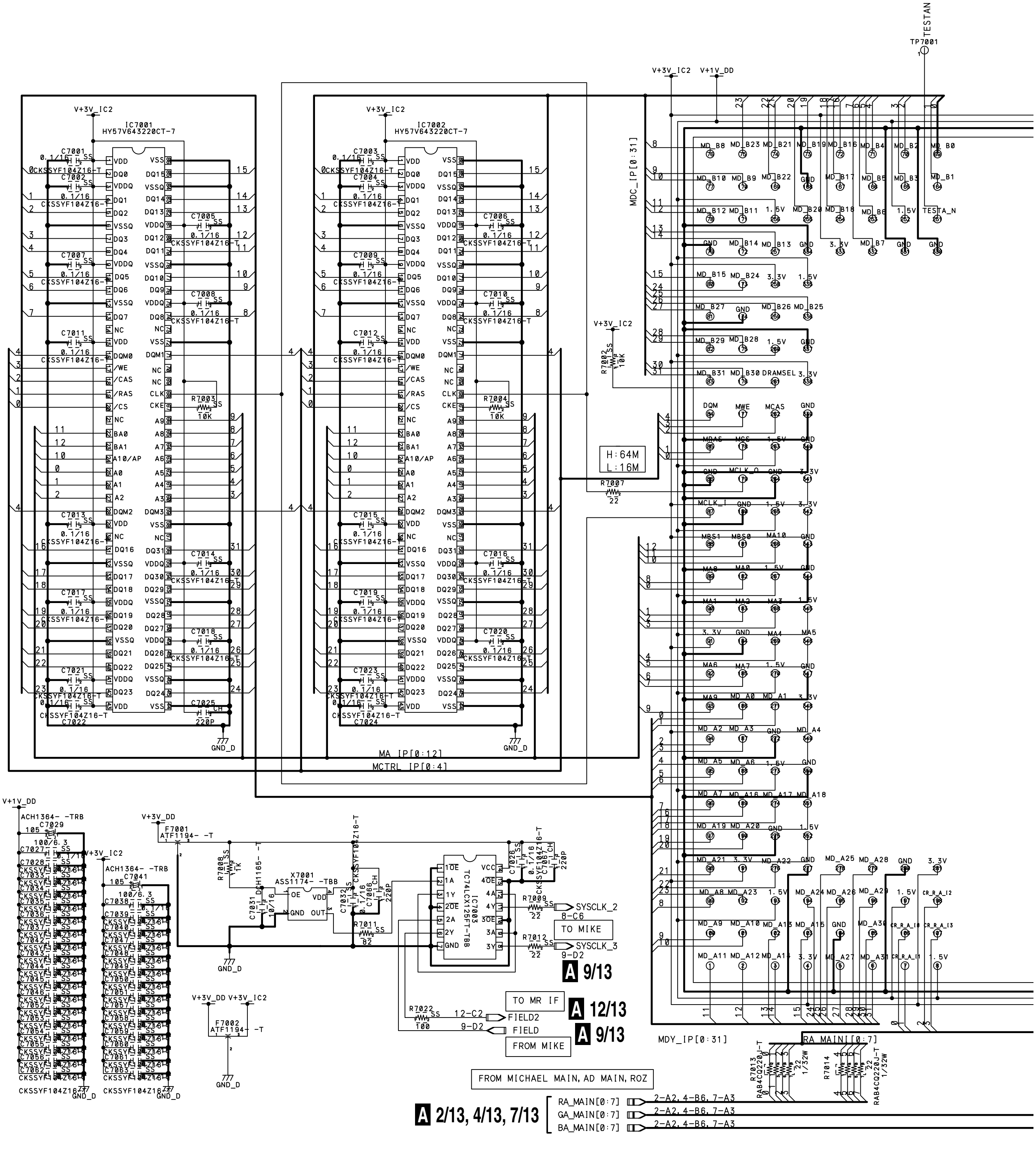
IC7001
HY57V643220CT-7
IC7002
HY57V643220CT-7
V+3V_IC2
V+1V_DD
V+3V_DD
TP7001
TESTAN
MDC_IP[0:31]
MDY_IP[0:31]
MA_IP[0:12]
MCTRL_IP[0:4]
H:64M
L:16M
R7002
R7003
R7004
R7007
R7008
R7009
R7011
R7012
R7022
R7013
R7014
RAB4CQ220J-T
C7001
C7003
C7025
C7026
C7029
C7041
CKSSYF104Z16-T
ACH1364- -TRB
F7001
F7002
ATF1194- -T
X7001
ASS1174- -TBB
IC7003
TC74LCX125FT-TBB
GND_D
SYSCLK_2
8-C6
TO MIKE
SYSCLK_3
9-D2
A 9/13
TO MR IF
A 12/13
FIELD2
12-C2
FIELD
9-D2
A 9/13
FROM MIKE
FROM MICHAEL MAIN, AD MAIN, ROZ
RA_MAIN[0:7]
A 2/13, 4/13, 7/13
RA_MAIN[0:7]
GA_MAIN[0:7]
BA_MAIN[0:7]
2-A2, 4-B6, 7-A3
DRAMSEL
TESTA_N

A 8/13

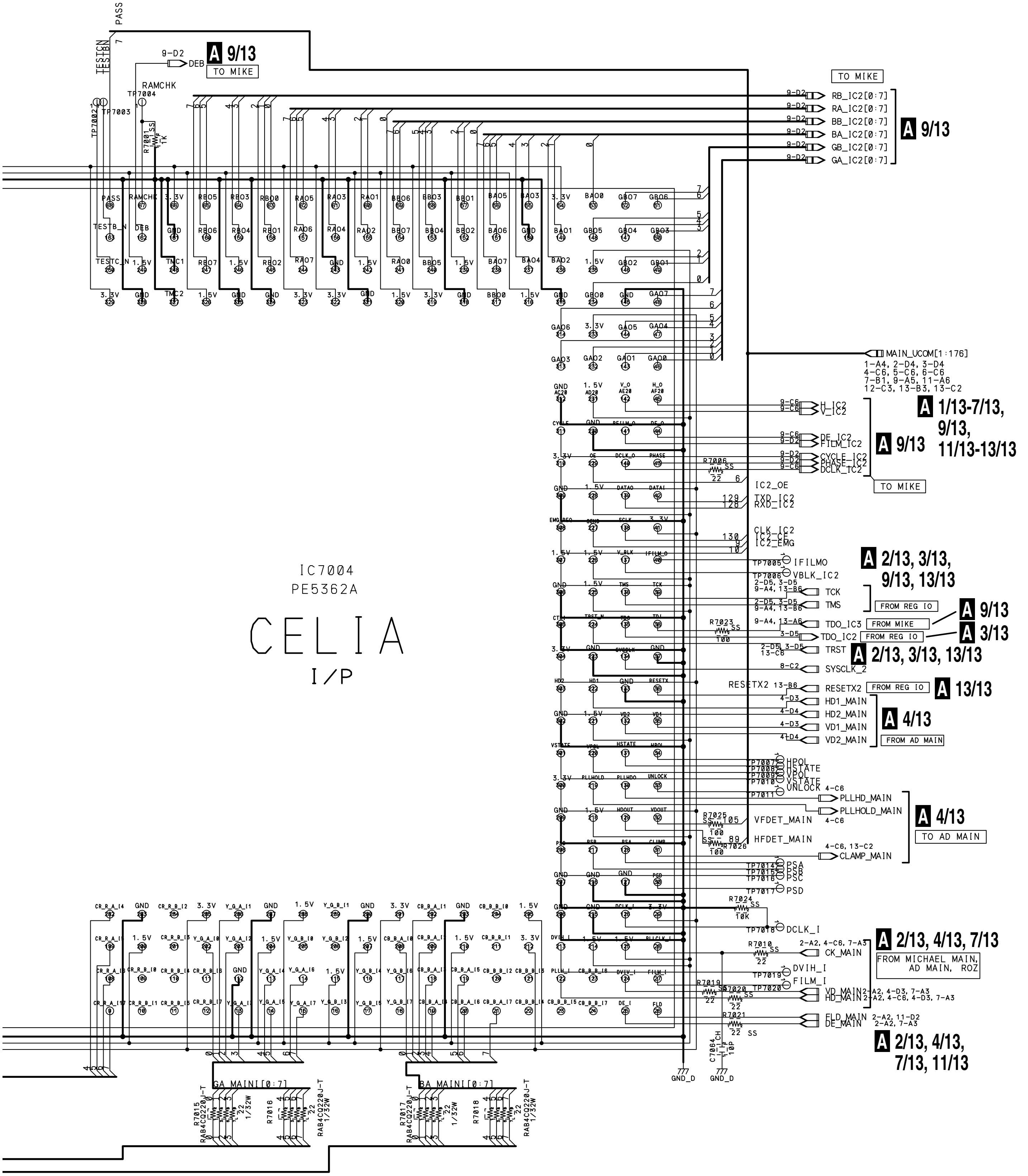
IC7004
PE5362A
CELIA
I/P
PASS
TESTCN
TESTBN
9-D2
DEB
A 9/13
TO MIKE
RAMCHK
TP7004
TP7003
TP7002
R7001
TO MIKE
RB_IC2[0:7]
RA_IC2[0:7]
BB_IC2[0:7]
BA_IC2[0:7]
GB_IC2[0:7]
GA_IC2[0:7]
A 9/13
MAIN_UCOM[1:176]
1-A4, 2-D4, 3-D4
4-C6, 5-C6, 6-C6
7-B1, 9-A5, 11-A6
12-C3, 13-B3, 13-C2
H_IC2
V_IC2
DE_IC2
FILM_IC2
CYCLE_IC2
PHASE_IC2
DCLK_IC2
A 9/13
A 1/13-7/13, 9/13, 11/13-13/13
TO MIKE
R7006
IC2_OE
TXD_IC2
RXD_IC2
CLK_IC2
IC2_CE
IC2_EMG
TP7005 IFILMO
TP7006 VBLK_IC2
TCK
TMS
FROM REG IO
A 2/13, 3/13, 9/13, 13/13
R7023
TDO_IC3
FROM MIKE
A 9/13
TDO_IC2
FROM REG IO
A 3/13
TRST
A 2/13, 3/13, 13/13
SYSCLK_2
RESETX2
RESETX2
FROM REG IO
A 13/13
HD1_MAIN
HD2_MAIN
VD1_MAIN
VD2_MAIN
A 4/13
FROM AD MAIN
TP7007 HPOL
TP7008 HSTATE
TP7009 VPOL
TP7010 VSTATE
TP7011 UNLOCK
PLLHD_MAIN
PLLHOLD_MAIN
A 4/13
TO AD MAIN
R7025
VFDET_MAIN
HFDET_MAIN
R7026
CLAMP_MAIN
TP7014 PSA
TP7015 PSB
TP7016 PSC
TP7017 PSD
R7024
10K
TP7018 DCLK_I
R7010
CK_MAIN
A 2/13, 4/13, 7/13
FROM MICHAEL MAIN, AD MAIN, ROZ
TP7019 DVIH_I
FILM_I
R7019
R7020
TP7020
VD_MAIN
HD_MAIN
R7021
FLD_MAIN
DE_MAIN
A 2/13, 4/13, 7/13, 11/13
C7064
10P
GND_D
GND_D
GA_MAIN[0:7]
BA_MAIN[0:7]
R7015
RAB4CQ220J-T
R7016
RAB4CQ220J-T
R7017
RAB4CQ220J-T
R7018
RAB4CQ220J-T
22
1/32W

A 8/13

3.11 MR MAIN BOARD ASSY (9/13)

A 9/13 MR MAIN BOARD ASSY (AWV2041)

● MIKE BLOCK

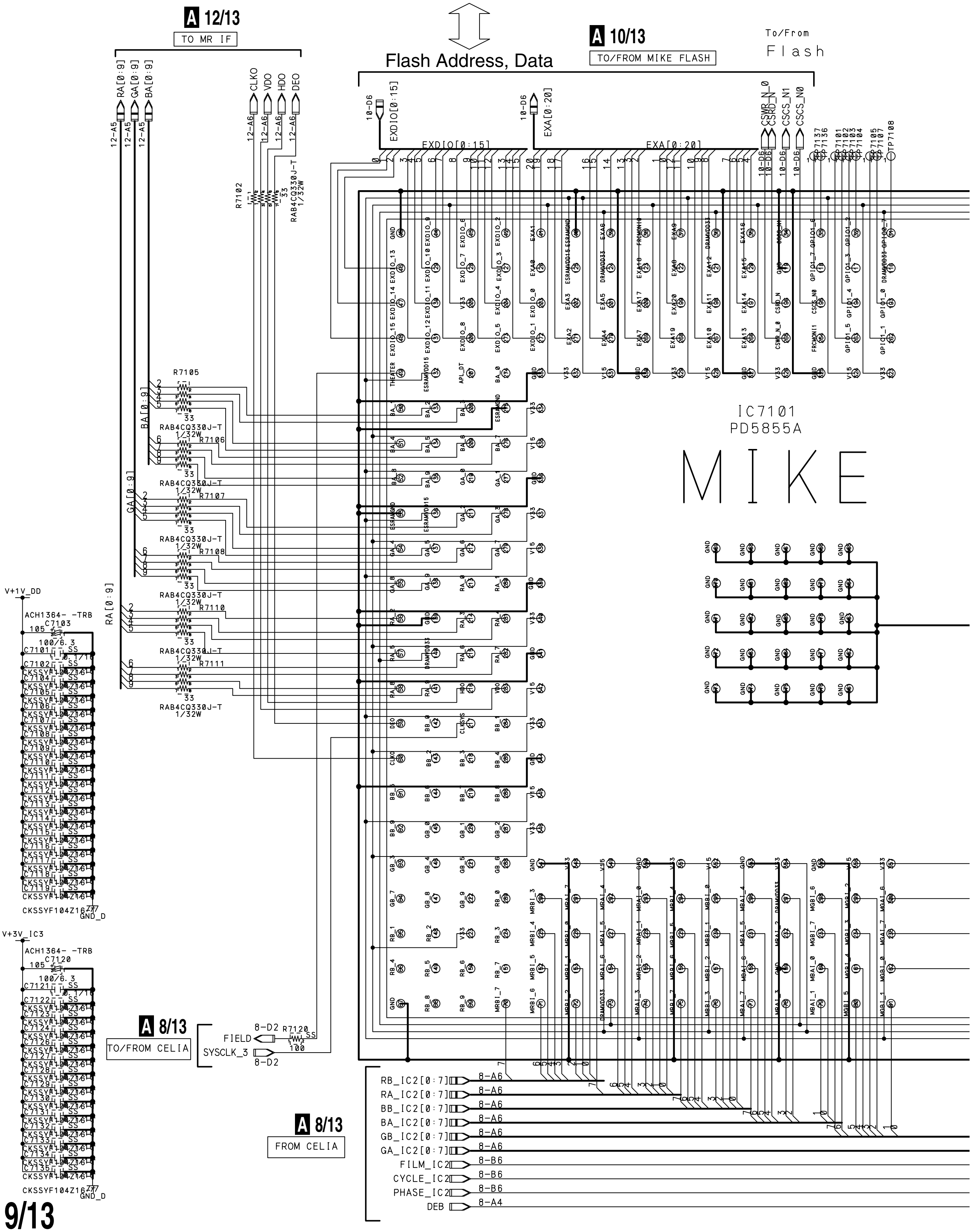
A 12/13
TO MR IF
RA[0:9]
GA[0:9]
BA[0:9]
CLKO
VDO
HDO
DEO
12-A5
12-A6
R7102
RAB4CQ330J-T
33
1/32W
Flash Address, Data
A 10/13
TO/FROM MIKE FLASH
To/From
Flash
10-D6
EXDIO[0:15]
EXA[0:20]
CSWR_N_0
CSRD_N
CSCS_N1
CSCS_N0
TP7137
TP7136
TP7101
TP7102
TP7103
TP7104
TP7105
TP7107
TP7108
R7105
R7106
R7107
R7108
R7110
R7111
IC7101
PD5855A
MIKE
V+1V_DD
ACH1364- -TRB
C7103
105
100/6.3
C7101
SS
0.1/16
CKSSYF104Z16
GND_D
V+3V_IC3
C7120
C7121
A 8/13
TO/FROM CELIA
FIELD
SYSCLK_3
8-D2
R7120
100
A 8/13
FROM CELIA
RB_IC2[0:7]
RA_IC2[0:7]
BB_IC2[0:7]
BA_IC2[0:7]
GB_IC2[0:7]
GA_IC2[0:7]
FILM_IC2
CYCLE_IC2
PHASE_IC2
DEB
8-A6
8-B6
8-A4

A 9/13

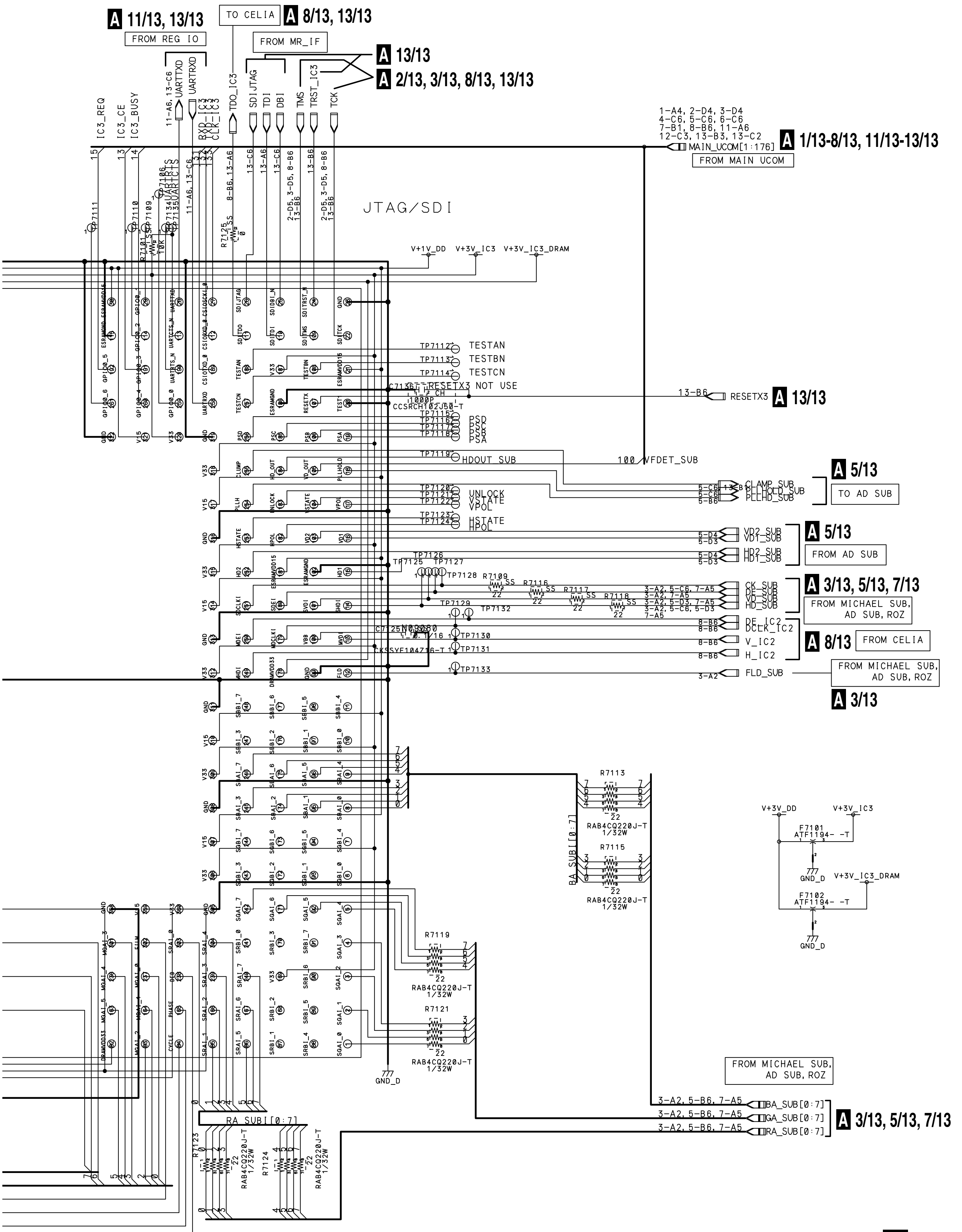
A 11/13, 13/13
FROM REG IO
TO CELIA
A 8/13, 13/13
FROM MR_IF
A 13/13
A 2/13, 3/13, 8/13, 13/13
IC3_REQ
IC3_CE
IC3_BUSY
11-A6, 13-C6
UARTTXD
UARTRXD
RXD_IC3
TXD_IC3
CLK_IC3
TDO_IC3
SDIJTAG
TDI
DBI
TMS
TRST_IC3
TCK
1-A4, 2-D4, 3-D4
4-C6, 5-C6, 6-C6
7-B1, 8-B6, 11-A6
12-C3, 13-B3, 13-C2
MAIN_UCOM[1:176]
A 1/13-8/13, 11/13-13/13
FROM MAIN UCOM
JTAG/SDI
V+1V_DD
V+3V_IC3
V+3V_IC3_DRAM
TP7111
TP7110
TP7109
TP7106
TP7134
TP7135
UARTRTS
UARTCTS
R7101
10K
R7125
0
TESTAN
TESTBN
TESTCN
TP7112
TP7113
TP7114
C7136
1000P
CH
CCSRCH102J50-T
RESETX3
NOT USE
13-B6
RESETX3
A 13/13
TP7115
TP7116
TP7117
TP7118
PSD
PSC
PSB
PSA
TP7119
HDOUT_SUB
100
VFDET_SUB
CLAMP_SUB
PLLHOLD_SUB
PLLHD_SUB
5-C6
5-B6
A 5/13
TO AD SUB
TP7120
TP7121
TP7122
UNLOCK
VSTATE
VPOL
TP7123
TP7124
HSTATE
HPOL
VD2_SUB
VD1_SUB
HD2_SUB
HD1_SUB
5-D4
5-D3
A 5/13
FROM AD SUB
TP7125
TP7126
TP7127
TP7128
R7109
R7116
R7117
R7118
SS
22
CK_SUB
DE_SUB
VD_SUB
HD_SUB
3-A2, 5-C6, 7-A5
3-A2, 7-A5
3-A2, 5-D3, 7-A5
3-A2, 5-C6, 5-D3
7-A5
A 3/13, 5/13, 7/13
FROM MICHAEL SUB, AD SUB, ROZ
TP7129
TP7132
C7125
0.1/16
CKSSYF104Z16-T
TP7130
TP7131
TP7133
8-B6
DE_IC2
DCLK_IC2
V_IC2
H_IC2
A 8/13
FROM CELIA
3-A2
FLD_SUB
FROM MICHAEL SUB, AD SUB, ROZ
A 3/13
GND
V33
V15
ESRAMVDD15
ESRAMGND
GPIO0_6
GPIO0_5
GPIO0_4
GPIO0_3
GPIO0_2
GPIO0_1
GPIO0_0
UARTRTS_N
UARTCTS_N
UARTTXD
UARTRXD
CSIOTXD_0
CSIORXD_0
CSIOSCKL_0
SDIJTAG
SDITDO
SDITDI
SDIDBI_N
SDITMS
SDITRST_N
SDITCK
TESTAN
TESTBN
TESTCN
RESETX
TEST
PSD
PSC
PSB
PSA
CLUMP
HD_OUT
VD_OUT
PLLHOLD
PLLH
UNLOCK
VSTATE
VPOL
HSTATE
HPOL
VD2
VD1
HD2
HD1
SDCLKI
SDEI
SVDI
SHDI
MDEI
MDCLKI
VBB
MVDI
MHDI
DRAMVDD33
FLD
SBBI_7
SBBI_6
SBBI_5
SBBI_4
SBBI_3
SBBI_2
SBBI_1
SBBI_0
SBAI_7
SBAI_6
SBAI_5
SBAI_4
SBAI_3
SBAI_2
SBAI_1
SBAI_0
SGBI_7
SGBI_6
SGBI_5
SGBI_4
SGBI_3
SGBI_2
SGBI_1
SGBI_0
SGAI_7
SGAI_6
SGAI_5
SGAI_4
SGAI_3
SGAI_2
SGAI_1
SGAI_0
SRBI_7
SRBI_6
SRBI_5
SRBI_4
SRBI_3
SRBI_2
SRBI_1
SRBI_0
SRAI_7
SRAI_6
SRAI_5
SRAI_4
SRAI_3
SRAI_2
SRAI_1
SRAI_0
MGAI_3
MGAI_4
MGAI_5
MGAI_0
MGAI_1
MGAI_2
SRAI_0
DRAMVDD33
PHASE
CYCLE
BEP
R7113
R7115
RAB4CQ220J-T
1/32W
BA_SUB[0:7]
R7119
R7121
GND_D
V+3V_DD
V+3V_IC3
F7101
ATF1194- -T
V+3V_IC3_DRAM
F7102
ATF1194- -T
FROM MICHAEL SUB, AD SUB, ROZ
3-A2, 5-B6, 7-A5
BA_SUB[0:7]
GA_SUB[0:7]
RA_SUB[0:7]
A 3/13, 5/13, 7/13
RA_SUB[0:7]
R7123
R7124
RAB4CQ220J-T
1/32W

A 9/13

3.12 MR MAIN BOARD ASSY (10/13)

A 10/13 MR MAIN BOARD ASSY (AWV2041)

● MIKE FLASH BLOCK

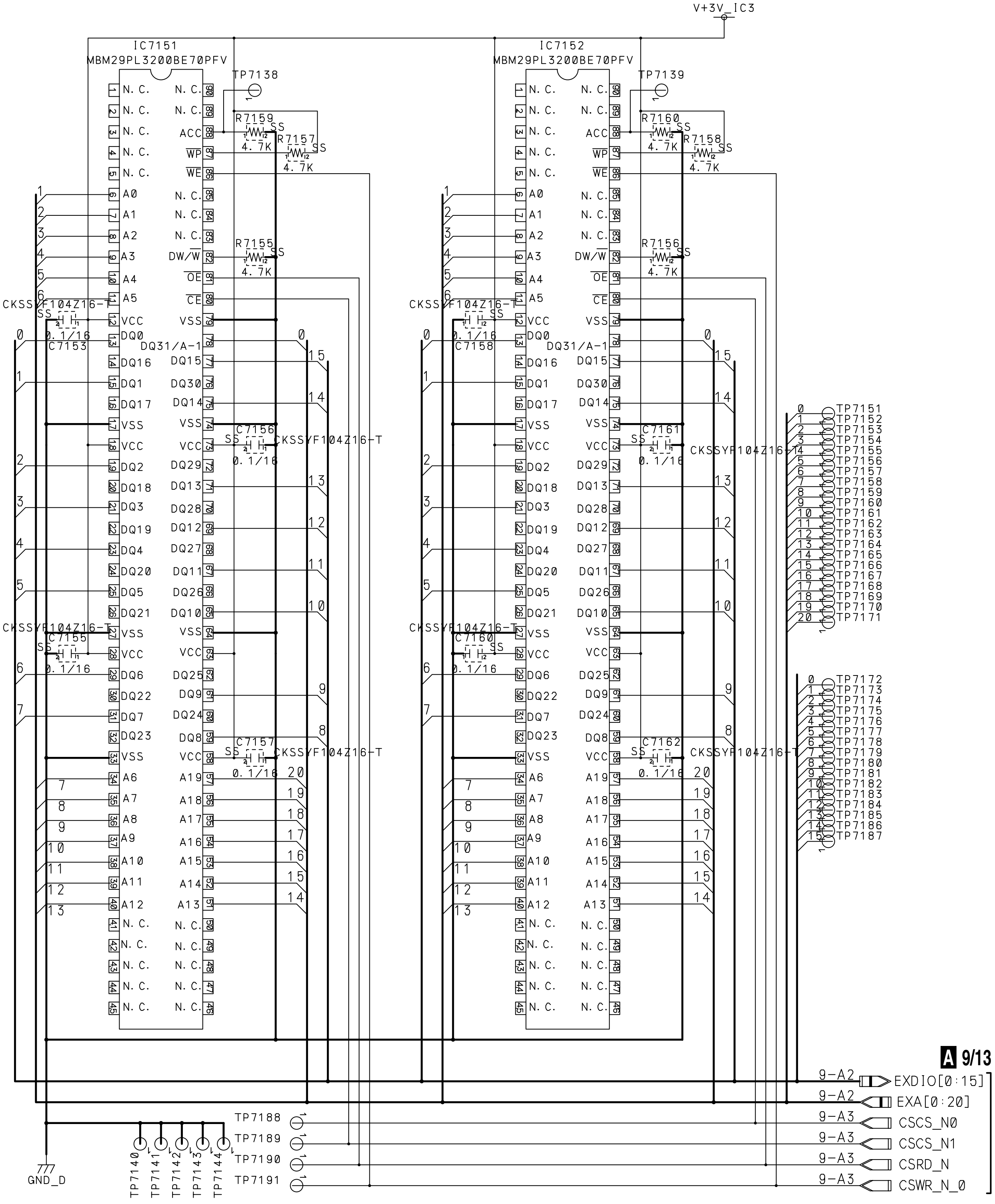
V+3V_IC3
IC7151
MBM29PL3200BE70PFV
IC7152
MBM29PL3200BE70PFV
TP7138
TP7139
R7159 4.7K SS
R7157 4.7K SS
R7155 4.7K SS
R7160 4.7K SS
R7158 4.7K SS
R7156 4.7K SS
C7153 0.1/16 CKSSYF104Z16-T SS
C7155 0.1/16 CKSSYF104Z16-T SS
C7156 0.1/16 CKSSYF104Z16-T SS
C7157 0.1/16 CKSSYF104Z16-T SS
C7158 0.1/16 CKSSYF104Z16-T SS
C7160 0.1/16 CKSSYF104Z16-T SS
C7161 0.1/16 CKSSYF104Z16-T SS
C7162 0.1/16 CKSSYF104Z16-T SS
1 N.C.
2 N.C.
3 N.C.
4 N.C.
5 N.C.
6 A0
7 A1
8 A2
9 A3
10 A4
11 A5
12 VCC
13 DQ0
14 DQ16
15 DQ1
16 DQ17
17 VSS
18 VCC
19 DQ2
20 DQ18
21 DQ3
22 DQ19
23 DQ4
24 DQ20
25 DQ5
26 DQ21
27 VSS
28 VCC
29 DQ6
30 DQ22
31 DQ7
32 DQ23
33 VSS
34 A6
35 A7
36 A8
37 A9
38 A10
39 A11
40 A12
41 N.C.
42 N.C.
43 N.C.
44 N.C.
45 N.C.
90 N.C.
89 N.C.
88 ACC
87 WP
86 WE
85 N.C.
84 N.C.
83 N.C.
82 DW/W
81 OE
80 CE
79 VSS
78 DQ31/A-1
77 DQ15
76 DQ30
75 DQ14
74 VSS
73 VCC
72 DQ29
71 DQ13
70 DQ28
69 DQ12
68 DQ27
67 DQ11
66 DQ26
65 DQ10
64 VSS
63 VCC
62 DQ25
61 DQ9
60 DQ24
59 DQ8
58 VCC
57 A19
56 A18
55 A17
54 A16
53 A15
52 A14
51 A13
50 N.C.
49 N.C.
48 N.C.
47 N.C.
46 N.C.
TP7151
TP7152
TP7153
TP7154
TP7155
TP7156
TP7157
TP7158
TP7159
TP7160
TP7161
TP7162
TP7163
TP7164
TP7165
TP7166
TP7167
TP7168
TP7169
TP7170
TP7171
TP7172
TP7173
TP7174
TP7175
TP7176
TP7177
TP7178
TP7179
TP7180
TP7181
TP7182
TP7183
TP7184
TP7185
TP7186
TP7187
TP7188
TP7189
TP7190
TP7191
TP7140
TP7141
TP7142
TP7143
TP7144
GND_D
A 9/13
9-A2 EXDIO[0:15]
9-A2 EXA[0:20]
9-A3 CSCS_N0
9-A3 CSCS_N1
9-A3 CSRD_N
9-A3 CSWR_N_0

A 10/13

A
B
C
D
E
F

3.13 MR MAIN BOARD ASSY (11/13)

A 11/13 MR MAIN BOARD ASSY (AWV2041)

● MAIN UCOM BLOCK

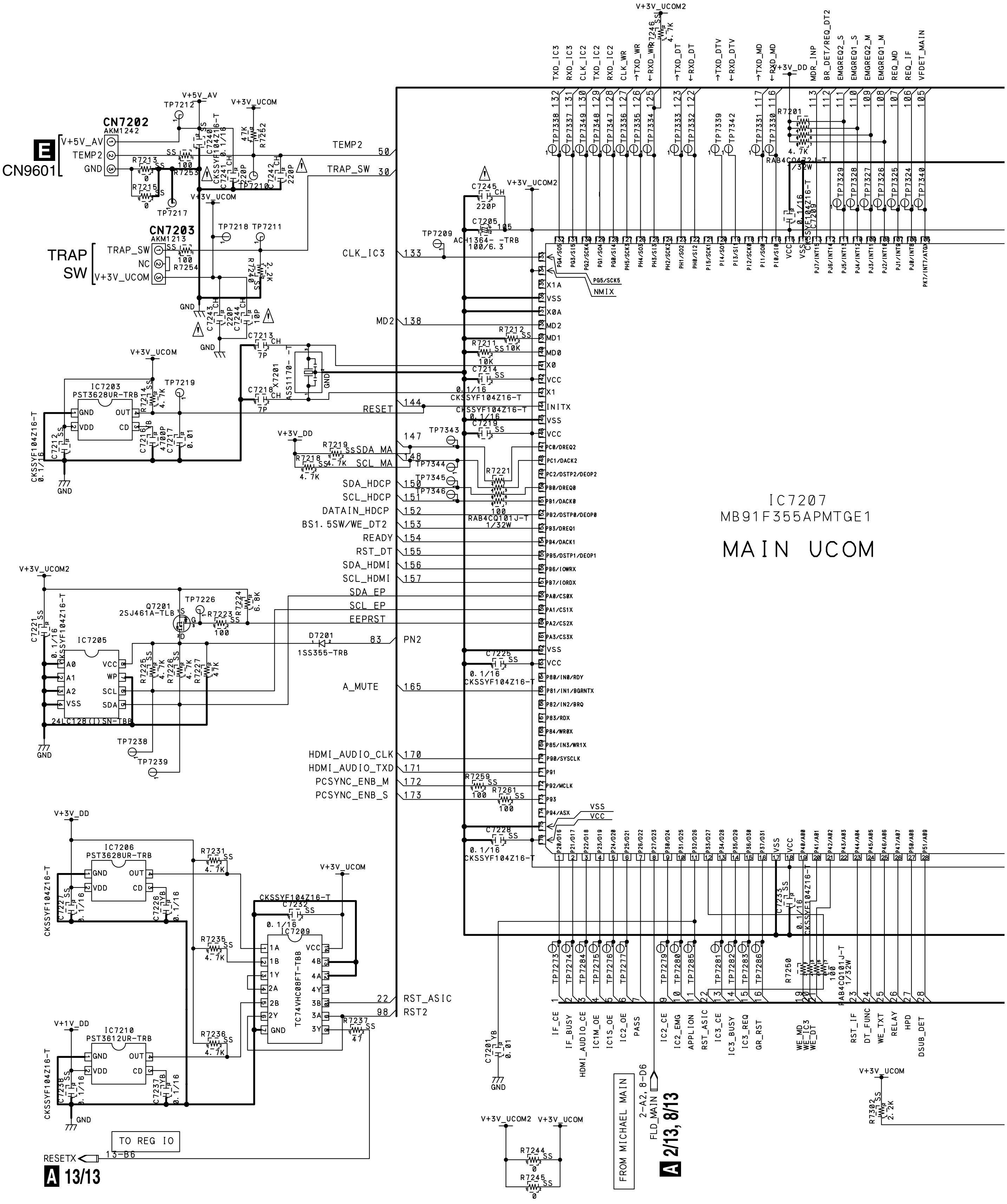

CN7202
AKM1242
E
CN9601
V+5V_AV
TEMP2
GND
TP7212
V+5V_AV
V+3V_UCOM
R7213 0
R7215 0
R7253 100
C7240 CKSSYF104Z16-T 0.1/16
C7241 220P CH
47K R7252
C7242 220P CH
TP7210
TP7217
V+3V_UCOM
TEMP2 50
TRAP_SW 30
CN7203
AKM1213
TRAP SW
TRAP_SW
NC
V+3V_UCOM
R7254 100
TP7218
TP7211
2.2K R7240
GND
C7243 220P CH
C7244 10P CH
CLK_IC3 133
MD2 138
C7213 7P CH
X7201 ASS1170- -T
C7216 7P CH
RESET 144
V+3V_UCOM
IC7203
PST3628UR-TRB
TP7219
R7214 4.7K
GND OUT
VDD CD
C7216 4700P B
C7217 0.01
C7212 CKSSYF104Z16-T 0.1/16
GND
V+3V_DD
R7219 4.7K
R7218 4.7K
SDA_MA 147
SCL_MA 148
SDA_HDCP 150
SCL_HDCP 151
DATAIN_HDCP 152
BS1.5SW/WE_DT2 153
READY 154
RST_DT 155
SDA_HDMI 156
SCL_HDMI 157
SDA_EP
SCL_EP
EEPRST
PN2 83
D7201 1SS355-TRB
A_MUTE 165
HDMI_AUDIO_CLK 170
HDMI_AUDIO_TXD 171
PCSYNC_ENB_M 172
PCSYNC_ENB_S 173
V+3V_UCOM2
C7221 CKSSYF104Z16-T 0.1/16
Q7201 2SJ461A-TLB
TP7226
R7223 100
R7224 6.8K
IC7205
24LC128(I)SN-TBB
A0 A1 A2 VSS VCC WP SCL SDA
R7225 4.7K
R7226 4.7K
R7227 47K
GND
TP7238
TP7239
V+3V_DD
IC7206
PST3628UR-TRB
R7231 4.7K
C7222 CKSSYF104Z16-T 0.1/16
C7226 0.1/16 B
V+3V_UCOM
CKSSYF104Z16-T
C7232 0.1/16
IC7209
TC74VHC08FT-TBB
1A 1B 1Y 2A 2B 2Y GND VCC 4B 4A 4Y 3B 3A 3Y
R7235 4.7K
R7236 4.7K
R7237 47
RST_ASIC 22
RST2 98
V+1V_DD
IC7210
PST3612UR-TRB
C7238 CKSSYF104Z16-T 0.1/16
C7237 0.1/16 B
GND
TO REG IO
RESETX 13-B6
A 13/13
TP7209
C7245 220P CH
V+3V_UCOM2
C7205 ACH1364- -TRB 100/6.3
R7212 10K
R7211 10K
C7214 CKSSYF104Z16-T 0.1/16
C7219 CKSSYF104Z16-T 0.1/16
TP7343
TP7344
TP7345
TP7346
R7221 RAB4CQ101J-T 100 1/32W
C7225 CKSSYF104Z16-T 0.1/16
R7259 100
R7261 100
C7228 CKSSYF104Z16-T 0.1/16
VSS
VCC
PG5/SCK5
NMIX
X1A VSS X0A MD2 MD1 MD0 X0 VCC X1 INITX VSS VCC
IC7207
MB91F355APMTGE1
MAIN UCOM
V+3V_UCOM2
R7246 4.7K
TXD_IC3 132
RXD_IC3 131
CLK_IC2 130
TXD_IC2 129
RXD_IC2 128
CLK_WR 127
→TXD_WR 126
←RXD_WR 125
→TXD_DT 123
←RXD_DT 122
→TXD_DTV
←RXD_DTV
→TXD_MD 117
←RXD_MD 116
V+3V_DD
MDR_INP 113
BR_DET/REQ_DT2 112
EMGREQ2_S 111
EMGREQ2_M 110
EMGREQ1_S 109
EMGREQ1_M 108
REQ_MD 107
REQ_IF 106
VFDET_MAIN 105
TP7338 TP7337 TP7349 TP7348 TP7347 TP7336 TP7335 TP7334 TP7333 TP7332 TP7339 TP7342 TP7331 TP7330
R7201 4.7K RAB4CQ472J-T 1/32W
C7209 CKSSYF104Z16-T 0.1/16
TP7329 TP7328 TP7327 TP7326 TP7325 TP7324 TP7340
C7233 CKSSYF104Z16-T 0.1/16
TP7273 TP7274 TP7284 TP7275 TP7276 TP7277 TP7279 TP7280 TP7285 TP7281 TP7282 TP7283 TP7286
R7250 RAB4CQ101J-T 100 1/32W
IF_CE 1
IF_BUSY 2
HDMI_AUDIO_CE 3
IC1M_OE 4
IC1S_OE 5
IC2_OE 6
PASS 7
IC2_CE 9
IC2_EMG 10
APPLION 11
RST_ASIC 12
IC3_CE 13
IC3_BUSY 14
IC3_REQ 15
GR_RST 16
WE_MD 19
WE_IC3 20
WE_DT 21
RST_IF 23
DT_FUNC 24
WE_TXT 25
RELAY 26
HPD 27
DSUB_DET 28
C7201 0.01 B
GND
FROM MICHAEL MAIN
2-A2,8-D6
FLD_MAIN
A 2/13, 8/13
V+3V_UCOM2 V+3V_UCOM
R7244 0
R7245 0
V+3V_UCOM
R7302 2.2K

A 11/13

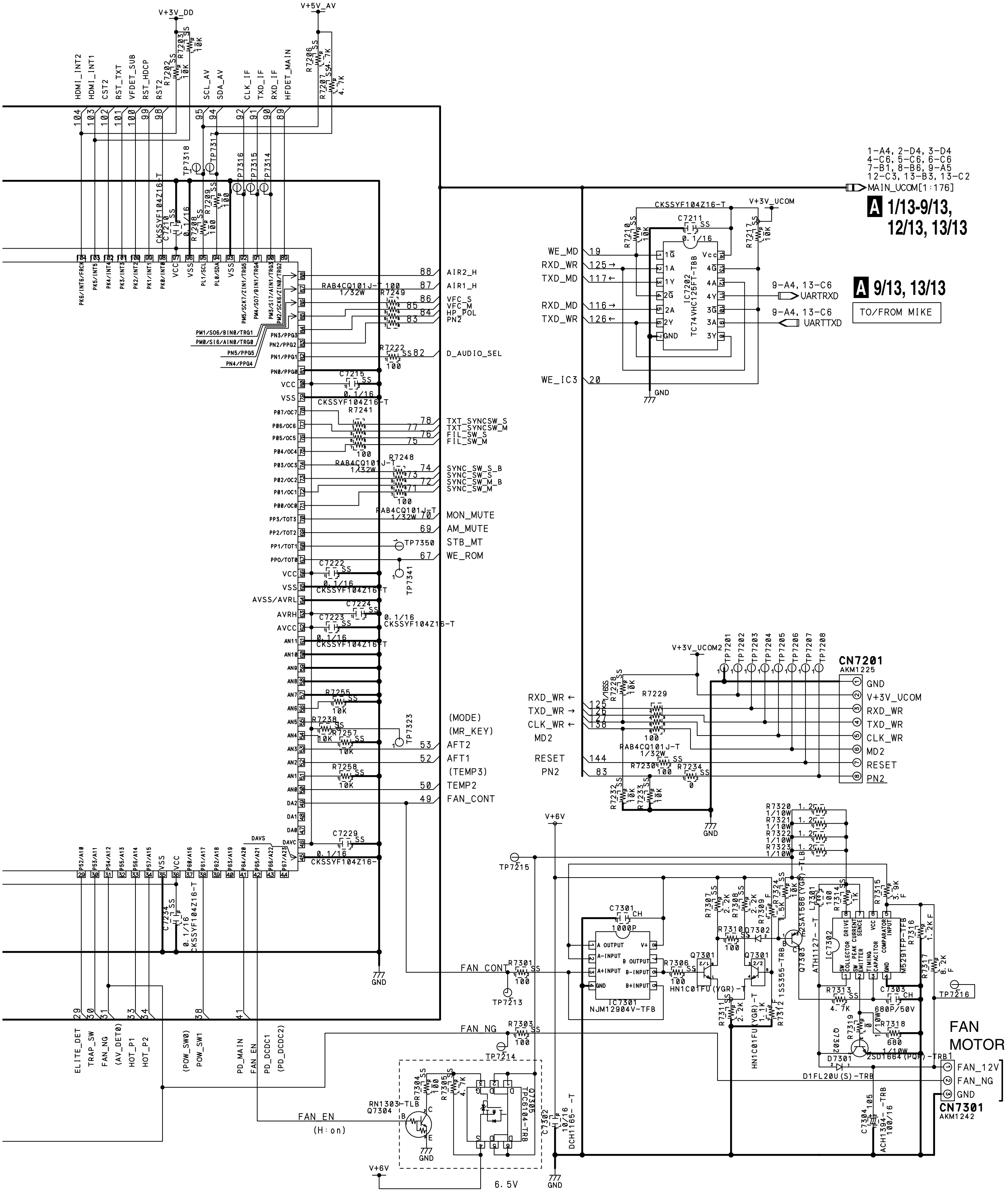
V+3V_DD
V+5V_AV
R7203 10K
R7202 10K
R7206 4.7K
R7207 4.7K
HDMI_INT2
HDMI_INT1
CST2
RST_TXT
VFDET_SUB
RST_HDCP
RST2
SCL_AV
SDA_AV
CLK_IF
TXD_IF
RXD_IF
HFDET_MAIN
TP7318
TP7317
TP7316
TP7315
TP7314
CKSSYF104Z16-T
C7210 0.1/16
R7208 100
R7209 100
1-A4, 2-D4, 3-D4
4-C6, 5-C6, 6-C6
7-B1, 8-B6, 9-A5
12-C3, 13-B3, 13-C2
MAIN_UCOM[1:176]
A 1/13-9/13, 12/13, 13/13
CKSSYF104Z16-T
V+3V_UCOM
C7211 0.1/16
R7210 10K
R7217 10K
WE_MD 19
RXD_WR 125
TXD_MD 117
RXD_MD 116
TXD_WR 126
WE_IC3 20
IC7202 TC74VHC125FT-TB8
GND
9-A4, 13-C6 UARTRXD
9-A4, 13-C6 UARTTXD
A 9/13, 13/13
TO/FROM MIKE
88 AIR2_H
87 AIR1_H
86 VFC_S
85 VFC_M
84 HP_POL
83 PN2
RAB4CQ101J-T 100 1/32W R7249
R7222 100 82 D_AUDIO_SEL
C7215 0.1/16 CKSSYF104Z16-T
R7241 100
78 TXT_SYNCSW_S
77 TXT_SYNCSW_M
76 FIL_SW_S
75 FIL_SW_M
R7248 RAB4CQ101J-T 1/32W
74 SYNC_SW_S_B
73 SYNC_SW_S
72 SYNC_SW_M_B
71 SYNC_SW_M
RAB4CQ101J-T 1/32W 100
70 MON_MUTE
69 AM_MUTE
TP7350 STB_MT
67 WE_ROM
TP7341
C7222 0.1/16 CKSSYF104Z16-T
C7224 0.1/16 CKSSYF104Z16-T
C7223 0.1/16 CKSSYF104Z16-T
R7255 10K
R7238 10K
R7257 10K
R7258 10K
TP7323
(MODE)
(MR_KEY)
53 AFT2
52 AFT1
(TEMP3)
50 TEMP2
49 FAN_CONT
C7229 0.1/16 CKSSYF104Z16-T
C7234 0.1/16 CKSSYF104Z16-T
GND
29 ELITE_DET
30 TRAP_SW
31 FAN_NG
(AV_DET0)
33 HOT_P1
34 HOT_P2
(POW_SW0)
38 POW_SW1
PD_MAIN
41 FAN_EN
42 PD_DCDC1
(PD_DCDC2)
V+3V_UCOM2
TP7201 TP7202 TP7203 TP7204 TP7205 TP7206 TP7207 TP7208
CN7201 AKM1225
GND
V+3V_UCOM
RXD_WR
TXD_WR
CLK_WR
MD2
RESET
PN2
RXD_WR 125
TXD_WR 126
CLK_WR 58
MD2
RESET 144
PN2 83
R7228 10K
R7229 RAB4CQ101J-T 1/32W 100
R7230 100
R7234 0
R7232 10K
R7233 10K
R7320 1.2 1/10W
R7321 1.2 1/10W
R7322 1.2 1/10W
R7323 1.2 1/10W
V+6V
TP7215
C7301 1000P CH
IC7301 NJM12904V-TFB
R7301 100 FAN_CONT
TP7213
R7306 100
Q7301 HN1C01FU(YGR)-T
R7307 2.2K
R7308 2.2K
R7309 5K
R7310 100
D7302 1SS355-TRB
R7324 10K
Q7303 2SA1586(YGR)-TLB
R7311 2.2K
R7312 1.1K
L7301 100
IC7302 ATH1127-T
R7314 1K
R7315 3.9K
R7316 1.2K
R7317 8.2K
M5291FP-TFB
R7313 4.7K
C7303 680P/50V CH
TP7216
R7318 680 1/10W
R7319 0 1/10W
Q7302 2SD1664(PQR)-TRB
D7301 D1FL20U(S)-TRB
FAN MOTOR
FAN_12V
FAN_NG
GND
CN7301 AKM1242
FAN_NG
R7303 100
TP7214
R7304 100
R7305 4.7K
RN1303-TL Q7304
Q7305 TPC6104-TRB
FAN_EN (H:on)
C7302 10/16 DCH1165-T
C7304 105 100/16 ACH1394-TRB
V+6V
6.5V
GND

3.14 MR MAIN BOARD ASSY (12/13)

A 12/13 MR MAIN BOARD ASSY (AWV2041)

● **MR I/F BLOCK**

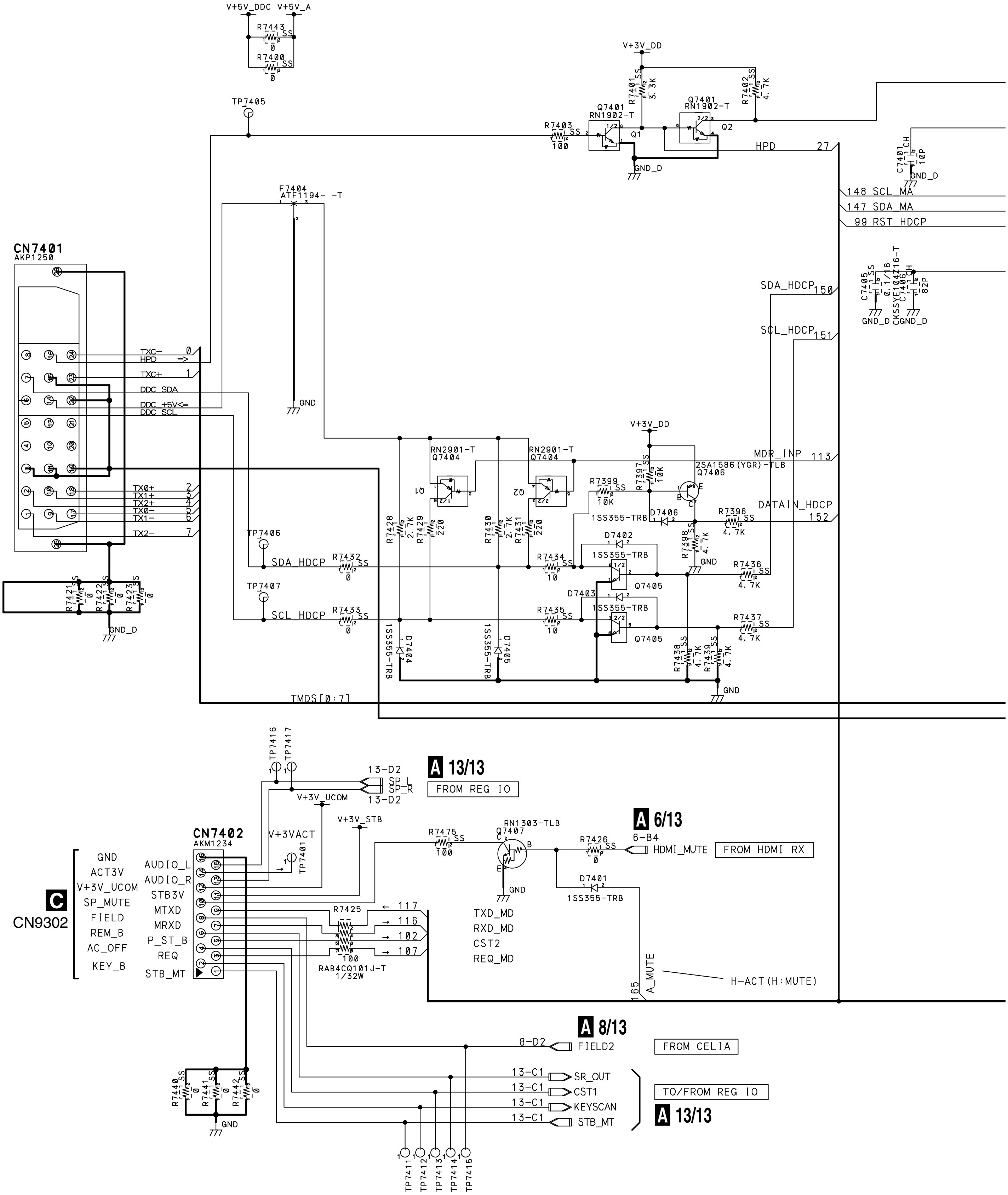

V+5V_DDC
V+5V_A
R7443 SS 0
R7400 SS 0
TP7405
V+3V_DD
R7401 SS 3.3K
R7402 SS 4.7K
Q7401 RN1902-T
Q1
Q2
R7403 SS 100
GND_D
HPD 27
C7401 CH 10P
148 SCL MA
147 SDA MA
99 RST HDCP
F7404 ATF1194- -T
CN7401 AKP1250
C7405 SS 0.1/16
C7406 CKSSYF104Z16-T
CH 82P
GND_D
SDA_HDCP 150
SCL_HDCP 151
TXC−
HPD
TXC+
DDC SDA
DDC +5V
DDC SCL
GND
TX0+
TX1+
TX2+
TX0−
TX1−
TX2−
0 1 2 3 4 5 6 7
V+3V_DD
MDR_INP 113
RN2901-T Q7404
2SA1586(YGR)-TLB Q7406
R7397 SS 10K
R7399 SS 10K
1SS355-TRB
D7406
DATAIN_HDCP 152
R7396 SS 4.7K
R7428 2.7K
R7429 220
R7430 2.7K
R7431 220
TP7406
SDA HDCP
R7432 SS 0
R7434 SS 10
D7402
1SS355-TRB
R7398 SS 4.7K
GND
R7436 SS 4.7K
Q7405
D7403
1SS355-TRB
TP7407
SCL HDCP
R7433 SS 0
R7435 SS 10
R7437 SS 4.7K
R7421 SS 0
R7422 SS 0
R7423 SS 0
GND_D
D7404 1SS355-TRB
D7405 1SS355-TRB
R7438 SS 4.7K
R7439 SS 4.7K
GND
TMDS[0:7]
TP7416
TP7417
13-D2
SP_L
SP_R
13-D2
V+3V_UCOM
A 13/13
FROM REG IO
V+3V_STB
CN7402 AKM1234
V+3VACT
TP7401
R7475 SS 100
RN1303-TLB Q7407
GND
R7426 SS 0
A 6/13
6-B4
HDMI_MUTE
FROM HDMI RX
D7401 1SS355-TRB
GND
ACT3V
V+3V_UCOM
SP_MUTE
FIELD
REM_B
AC_OFF
KEY_B
C
CN9302
AUDIO_L
AUDIO_R
STB3V
MTXD
MRXD
P_ST_B
REQ
STB_MT
R7425
100
RAB4CQ101J-T 1/32W
← 117
→ 116
→ 102
→ 107
TXD_MD
RXD_MD
CST2
REQ_MD
165
A_MUTE
H-ACT(H:MUTE)
A 8/13
8-D2
FIELD2
FROM CELIA
13-C1 SR_OUT
13-C1 CST1
13-C1 KEYSCAN
13-C1 STB_MT
TO/FROM REG IO
A 13/13
R7440 SS 0
R7441 SS 0
R7442 SS 0
GND
TP7411
TP7412
TP7413
TP7414
TP7415

A 12/13

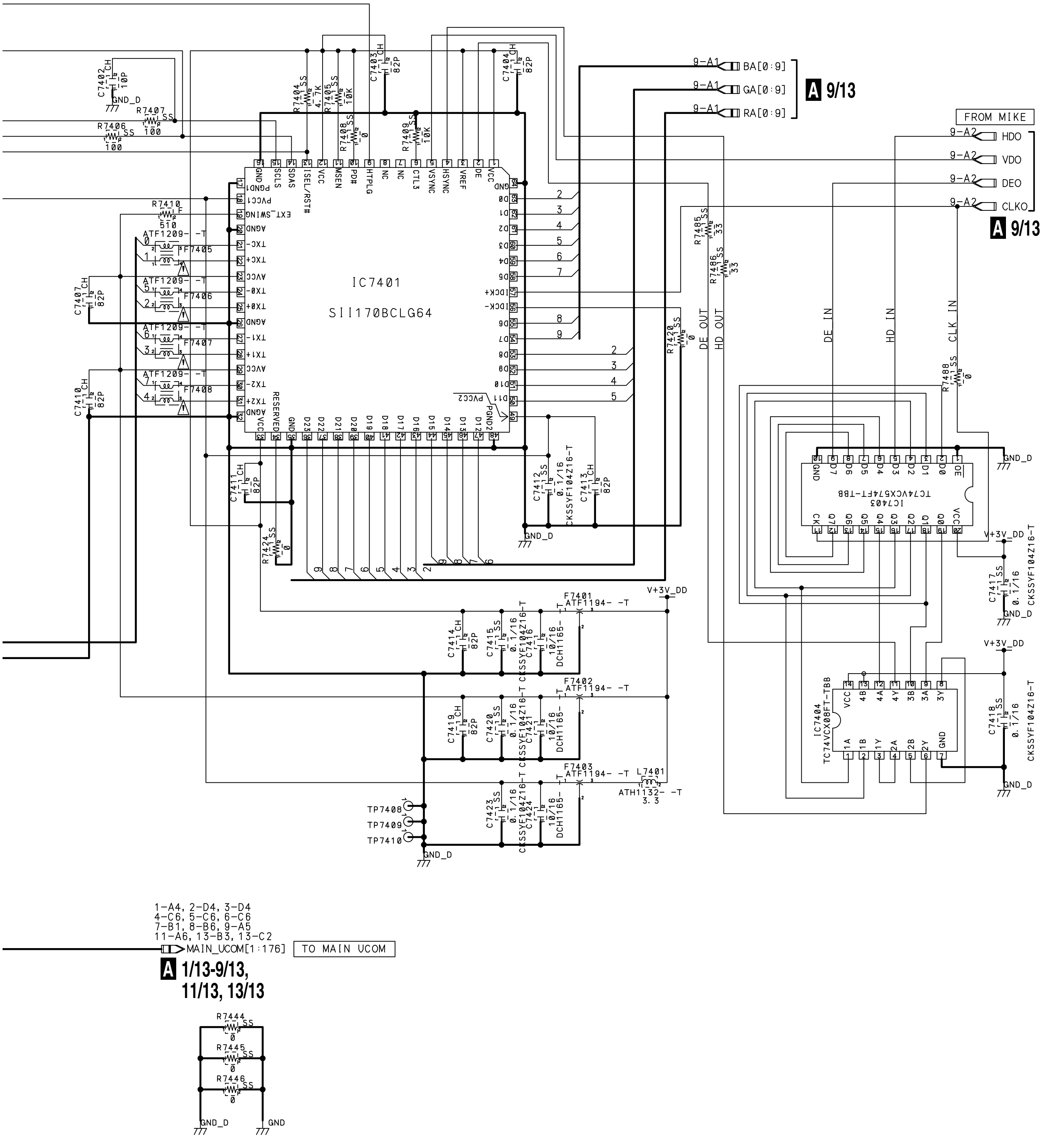
IC7401
SII170BCLG64
IC7403
TC74VCX574FT-TBB
IC7404
TC74VCX08FT-TBB
9-A1 BA[0:9]
9-A1 GA[0:9]
9-A1 RA[0:9]
A 9/13
FROM MIKE
9-A2 HDO
9-A2 VDO
9-A2 DEO
9-A2 CLKO
A 9/13
DE OUT
HD OUT
DE IN
HD IN
CLK IN
C7402 CH 10P
GND_D
R7407 SS 100
R7406 SS 100
R7404 SS 4.7K
R7405 SS 10K
R7408 SS 0
C7403 CH 82P
R7409 SS 10K
C7404 CH 82P
R7410 F 510
ATF1209- -T
F7405
F7406
F7407
F7408
C7407 CH 82P
C7410 CH 82P
C7411 CH 82P
C7412 SS 0.1/16
CKSSYF104Z16-T
C7413 CH 82P
R7424 SS 0
R7420 SS 0
R7485 SS 33
R7486 SS 33
R7488 SS 0
C7417 SS 0.1/16 CKSSYF104Z16-T
C7418 SS 0.1/16 CKSSYF104Z16-T
V+3V_DD
F7401 ATF1194- -T
F7402 ATF1194- -T
F7403 ATF1194- -T
C7414 CH 82P
C7415 SS 0.1/16 CKSSYF104Z16-T
C7416 10/16 DCH1165-
C7419 CH 82P
C7420 SS 0.1/16 CKSSYF104Z16-T
C7421 10/16 DCH1165-
C7423 SS 0.1/16 CKSSYF104Z16-T
C7424 10/16 DCH1165-
L7401 ATH1132- -T 3.3
TP7408
TP7409
TP7410
GND_D
1-A4, 2-D4, 3-D4
4-C6, 5-C6, 6-C6
7-B1, 8-B6, 9-A5
11-A6, 13-B3, 13-C2
MAIN_UCOM[1:176]
TO MAIN UCOM
A 1/13-9/13, 11/13, 13/13
R7444 SS 0
R7445 SS 0
R7446 SS 0
GND_D
GND

A B C D E F

A 12/13

3.15 MR MAIN BOARD ASSY (13/13)

A 13/13 MR MAIN BOARD ASSY (AWV2041)

● REGULATOR BLOCK

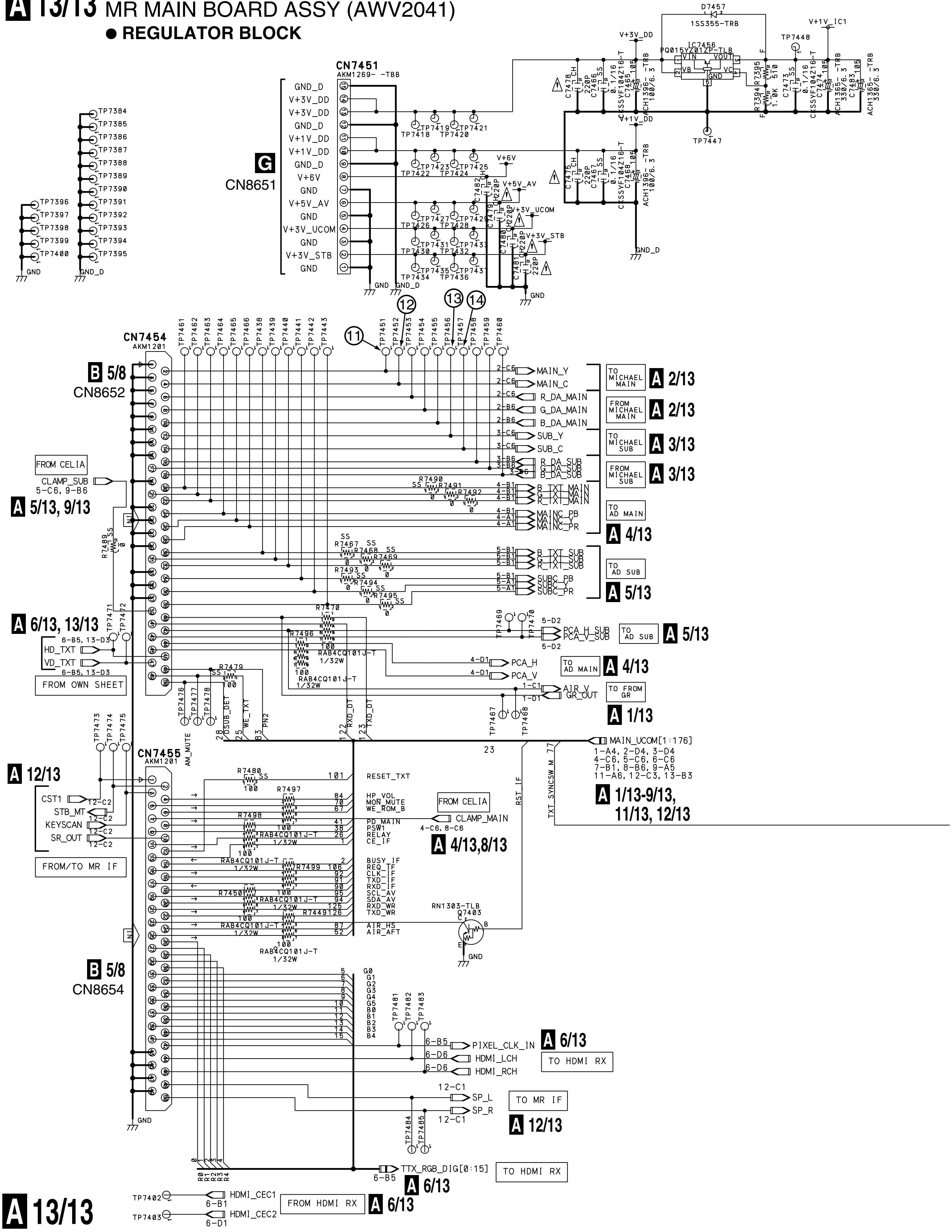

D7457
1SS355-TRB
V+1V_IC1
TP7448
V+3V_DD
IC7456
PQ015YZ01ZP-TLB
VIN
VOUT
VB
VC
GND
C7478 CH 220P
C7466 SS 0.1/16
C7465 CKSSYF104Z16-T 105
ACH1396- -TRB 100/6.3
R7394 1.0K
R7395 510
C7473 SS 0.1/16
C7474 CKSSYF104Z16-T 105
C7483 ACH1365- -TRB 330/6.3
ACH1365- -TRB 330/6.3
TP7447
V+1V_DD
C7475 CH 220P
C7467 SS 0.1/16
C7468 CKSSYF104Z16-T 105
ACH1396- -TRB 100/6.3
GND_D
CN7451
AKM1269- -TBB
GND_D
V+3V_DD
V+3V_DD
GND_D
V+1V_DD
V+1V_DD
GND_D
V+6V
GND
V+5V_AV
GND
V+3V_UCOM
GND
V+3V_STB
GND
G
CN8651
TP7418 TP7419 TP7420 TP7421
TP7422 TP7423 TP7424 TP7425
TP7426 TP7427 TP7428 TP7429
TP7430 TP7431 TP7432 TP7433
TP7434 TP7435 TP7436 TP7437
V+6V
V+5V_AV
V+3V_UCOM
V+3V_STB
C7482 CH 220P
C7479 CH 220P
C7480 CH 220P
C7481 CH 220P
GND
GND_D
TP7384 TP7385 TP7386 TP7387 TP7388 TP7389 TP7390 TP7391 TP7392 TP7393 TP7394 TP7395
TP7396 TP7397 TP7398 TP7399 TP7400
GND
GND_D
⑪ ⑫ ⑬ ⑭
TP7461 TP7462 TP7463 TP7464 TP7465 TP7466 TP7438 TP7439 TP7440 TP7441 TP7442 TP7443
TP7451 TP7452 TP7453 TP7454 TP7455 TP7456 TP7457 TP7458 TP7459 TP7460
CN7454
AKM1201
B 5/8
CN8652
2-C6 MAIN_Y
2-C6 MAIN_C
2-C6 R_DA_MAIN
2-B6 G_DA_MAIN
2-B6 B_DA_MAIN
3-C6 SUB_Y
3-C6 SUB_C
3-B6 R_DA_SUB
3-B6 G_DA_SUB
3-B6 B_DA_SUB
TO MICHAEL MAIN
A 2/13
FROM MICHAEL MAIN
A 2/13
TO MICHAEL SUB
A 3/13
FROM MICHAEL SUB
A 3/13
R7490 SS 0
R7491 0
R7492 0
4-B1 B_TXT_MAIN
4-B1 G_TXT_MAIN
4-B1 R_TXT_MAIN
4-B1 MAINC_PB
4-A1 MAINC_Y
4-A1 MAINC_PR
TO AD MAIN
A 4/13
FROM CELIA
CLAMP_SUB
5-C6, 9-B6
A 5/13, 9/13
R7489 SS 0
R7467 SS 0
R7468 SS 0
R7469 SS 0
R7493 SS 0
R7494 SS 0
R7495 SS 0
5-B1 B_TXT_SUB
5-B1 G_TXT_SUB
5-B1 R_TXT_SUB
5-B1 SUBC_PB
5-A1 SUBC_Y
5-A1 SUBC_PR
TO AD SUB
A 5/13
R7470 100
R7496 100
RAB4CQ101J-T 1/32W
TP7469 TP7470
5-D2 PCA_H_SUB
PCA_V_SUB 5-D2
TO AD SUB
A 5/13
A 6/13, 13/13
TP7471 TP7472
6-B5, 13-D3
HD_TXT
VD_TXT
6-B5, 13-D3
FROM OWN SHEET
4-D1 PCA_H
4-D1 PCA_V
TO AD MAIN
A 4/13
R7479 SS 100
1-C1 AIR_V
1-D1 GR_OUT
TO FROM GR
A 1/13
TP7476 TP7477 TP7478
DSUB_DET
WE_TXT
PN2
RXD_DT
TXD_DT
TP7467 TP7468
28 25 83 122 123 23
MAIN_UCOM[1:176]
1-A4, 2-D4, 3-D4
4-C6, 5-C6, 6-C6
7-B1, 8-B6, 9-A5
11-A6, 12-C3, 13-B3
A 1/13-9/13, 11/13, 12/13
RST_IF
TXT_SYNCSW_M 77
TP7473 TP7474 TP7475
CN7455
AKM1201
AM_MUTE
A 12/13
CST1 12-C2
STB_MT 12-C2
KEYSCAN 12-C2
SR_OUT 12-C2
FROM/TO MR IF
R7480 SS 100
101 RESET_TXT
R7497
84 HP_VOL
70 MON_MUTE
67 WE_ROM_B
FROM CELIA
CLAMP_MAIN
4-C6, 8-C6
A 4/13,8/13
R7498 100
41 PD_MAIN
38 PSW1
26 RELAY
1 CE_IF
RAB4CQ101J-T 1/32W
2 BUSY_IF
R7499 106 REQ_IF
92 CLK_IF
91 TXD_IF
90 RXD_IF
95 SCL_AV
94 SDA_AV
125 RXD_WR
R7449 126 TXD_WR
87 AIR_HS
52 AIR_AFT
R7450 100
RN1303-TLB
Q7403
B C E
GND
B 5/8
CN8654
5 G0
6 G1
7 G2
8 G3
9 G4
10 G5
11 B0
12 B1
13 B2
14 B3
15 B4
TP7481 TP7482 TP7483
6-B5 PIXEL_CLK_IN
6-D6 HDMI_LCH
6-D6 HDMI_RCH
A 6/13
TO HDMI RX
12-C1 SP_L
SP_R 12-C1
TO MR IF
A 12/13
TP7484 TP7485
GND
R0 R1 R2 R3 R4
0 1 2 3 4
TTX_RGB_DIG[0:15]
6-B5
TO HDMI RX
A 6/13
TP7402 HDMI_CEC1 6-B1
TP7403 HDMI_CEC2 6-D1
FROM HDMI RX
A 6/13

A 13/13

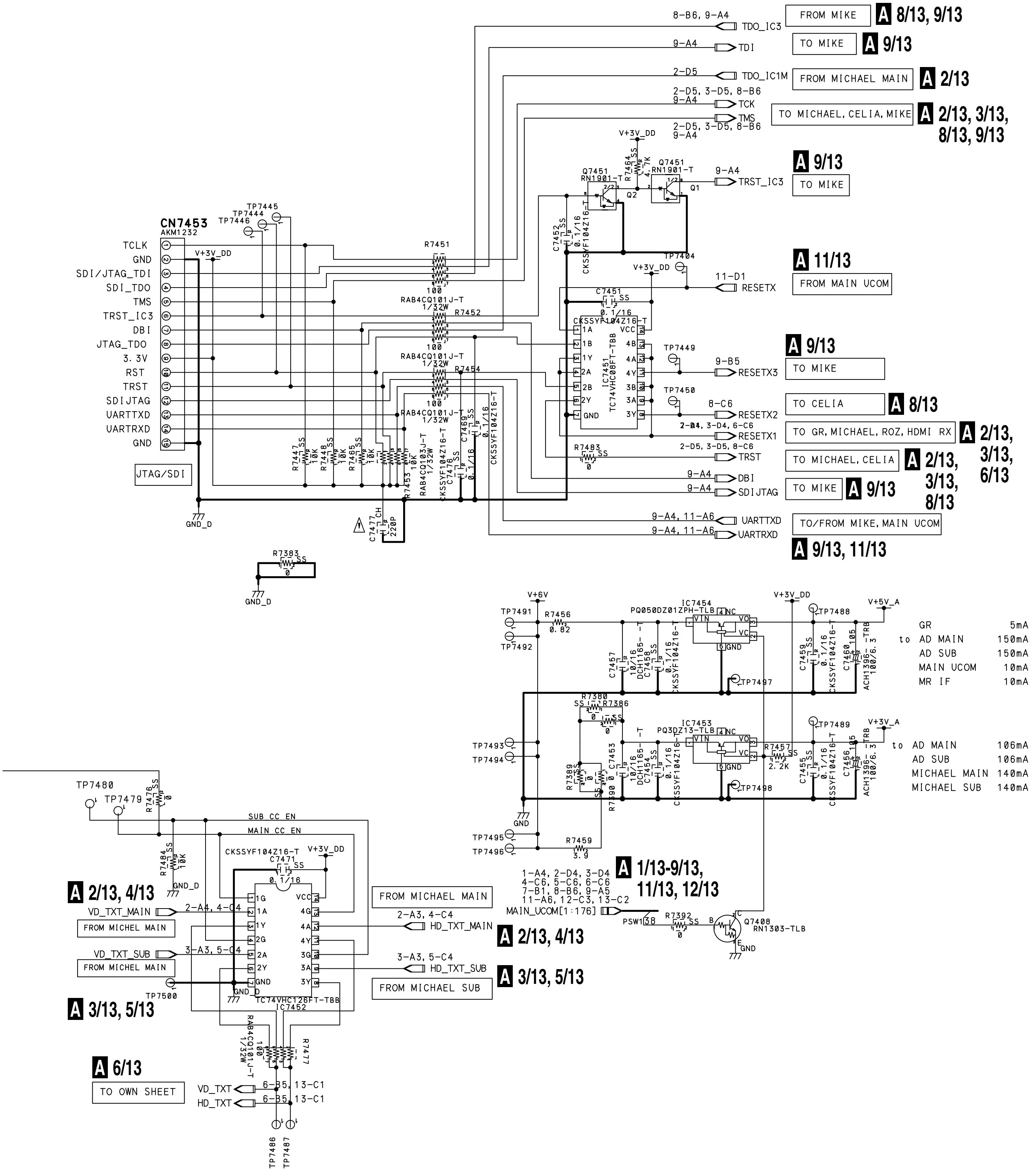
8-B6, 9-A4
TDO_IC3
FROM MIKE
A 8/13, 9/13
9-A4
TDI
TO MIKE
A 9/13
2-D5
TDO_IC1M
FROM MICHAEL MAIN
A 2/13
2-D5, 3-D5, 8-B6
9-A4
TCK
TMS
TO MICHAEL, CELIA, MIKE
A 2/13, 3/13, 8/13, 9/13
2-D5, 3-D5, 8-B6
9-A4
V+3V_DD
R7464 4.7K
Q7451 RN1901-T
Q2
Q1
9-A4
TRST_IC3
A 9/13
TO MIKE
CN7453
AKM1232
TCLK
GND
SDI/JTAG_TDI
SDI_TDO
TMS
TRST_IC3
DBI
JTAG_TDO
3.3V
RST
TRST
SDIJTAG
UARTTXD
UARTRXD
GND
JTAG/SDI
TP7444
TP7445
TP7446
V+3V_DD
R7451
100
RAB4CQ101J-T 1/32W
R7452
R7454
C7452 0.1/16 CKSSYF104Z16-T
TP7404
V+3V_DD
11-D1
RESETX
A 11/13
FROM MAIN UCOM
C7451 0.1/16 CKSSYF104Z16-T
IC7451 TC74VHC08FT-TBB
1A 1B 1Y 2A 2B 2Y GND VCC 4B 4A 4Y 3B 3A 3Y
TP7449
9-B5
RESETX3
A 9/13
TO MIKE
TP7450
8-C6
RESETX2
TO CELIA
A 8/13
2-B4, 3-D4, 6-C6
RESETX1
TO GR, MICHAEL, ROZ, HDMI RX
A 2/13, 3/13, 6/13
R7483 0
2-D5, 3-D5, 8-C6
TRST
TO MICHAEL, CELIA
A 2/13, 3/13, 8/13
9-A4
DBI
9-A4
SDIJTAG
TO MIKE
A 9/13
9-A4, 11-A6
UARTTXD
9-A4, 11-A6
UARTRXD
TO/FROM MIKE, MAIN UCOM
A 9/13, 11/13
R7447 10K
R7448 10K
R7465 10K
R7453 10K RAB4CQ103J-T 1/32W
C7476 CKSSYF104Z16-T
C7469 0.1/16
CKSSYF104Z16-T
C7477 CH 220P
GND_D
R7383 0
GND_D
V+6V
TP7491
TP7492
R7456 0.82
IC7454 PQ050DZ01ZPH-TLB
VIN VO VC GND NC
C7457 10/16 DCH1165- -T
C7458 0.1/16 CKSSYF104Z16-T
V+3V_DD
TP7488
V+5V_A
C7459 0.1/16 CKSSYF104Z16-T
C7460 100/6.3 ACH1396- -TRB
TP7497
GR 5mA
to AD MAIN 150mA
AD SUB 150mA
MAIN UCOM 10mA
MR IF 10mA
R7380 0
R7386 0
IC7453 PQ3DZ13-TLB
TP7493
TP7494
R7389 0
R7390 0
C7453 10/16 DCH1165- -T
C7454 0.1/16 CKSSYF104Z16-T
R7457 2.2K
TP7489
V+3V_A
C7455 0.1/16 CKSSYF104Z16-T
C7456 100/6.3 ACH1396- -TRB
TP7498
to AD MAIN 106mA
AD SUB 106mA
MICHAEL MAIN 140mA
MICHAEL SUB 140mA
GND
TP7495
TP7496
R7459 3.9
A 1/13-9/13, 11/13, 12/13
1-A4, 2-D4, 3-D4
4-C6, 5-C6, 6-C6
7-B1, 8-B6, 9-A5
11-A6, 12-C3, 13-C2
MAIN_UCOM[1:176]
PSW1 38
R7392 0
Q7408 RN1303-TLB
B C E
GND
TP7480
TP7479
R7476 0
R7484 10K
GND_D
SUB CC EN
MAIN CC EN
CKSSYF104Z16-T
C7471 0.1/16
V+3V_DD
A 2/13, 4/13
VD_TXT_MAIN
2-A4, 4-C4
FROM MICHEL MAIN
VD_TXT_SUB
3-A3, 5-C4
FROM MICHEL MAIN
A 3/13, 5/13
TP7500
1G 1A 1Y 2G 2A 2Y GND VCC 4G 4A 4Y 3G 3A 3Y
GND_D
TC74VHC126FT-TBB
IC7452
FROM MICHAEL MAIN
2-A3, 4-C4
HD_TXT_MAIN
A 2/13, 4/13
3-A3, 5-C4
HD_TXT_SUB
FROM MICHAEL SUB
A 3/13, 5/13
RAB4CQ101J-T 1/32W 100
R7477
A 6/13
TO OWN SHEET
VD_TXT
HD_TXT
6-B5, 13-C1
6-B5, 13-C1
TP7486
TP7487

A 13/13

3.16 AV BOARD ASSY (1/8)

B 1/8 AV BOARD ASSY (AWZ6813)

● TUNER BLOCK

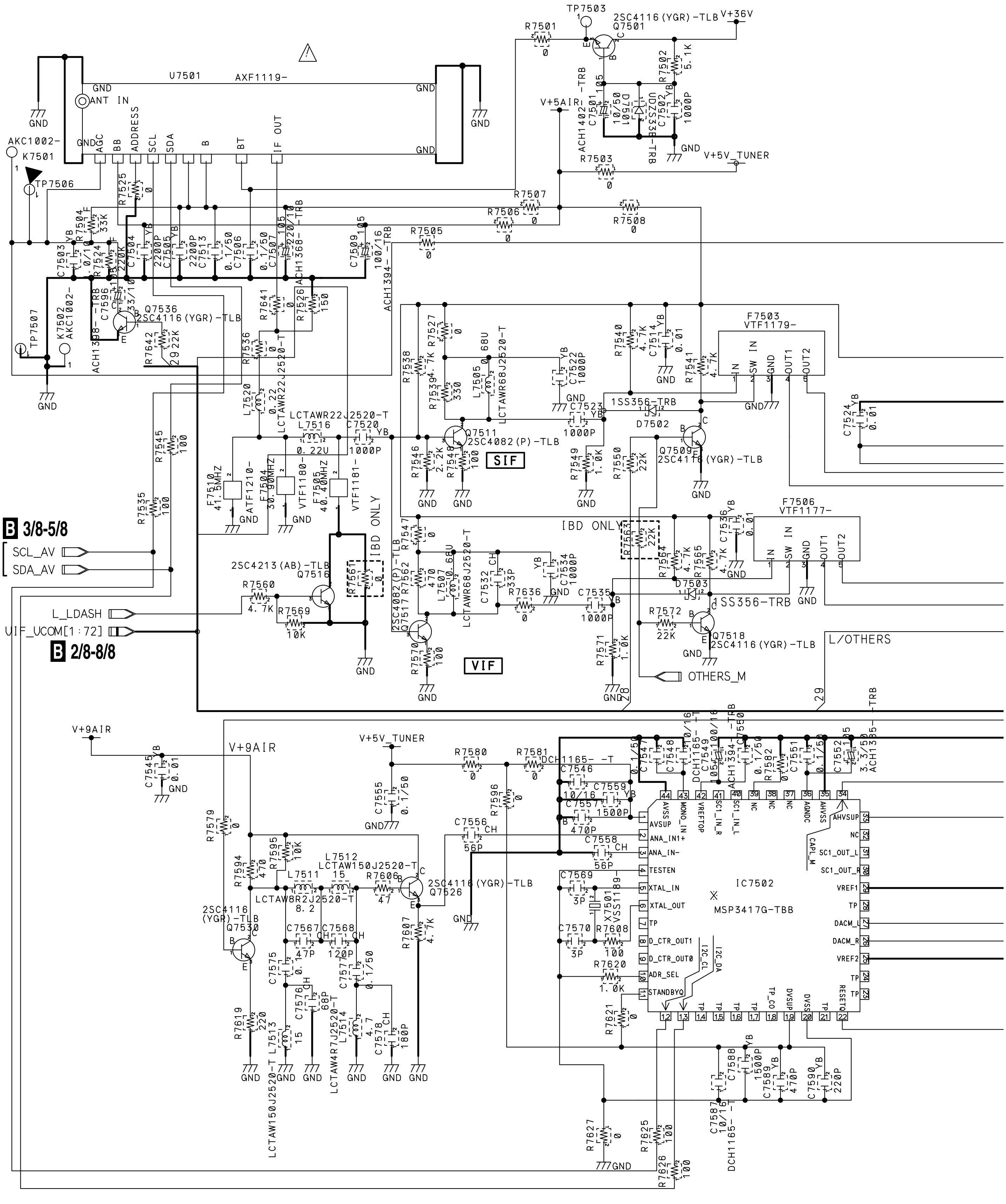

TP7503
2SC4116(YGR)-TLB
Q7501
V+36V
R7501
0
R7502
5.1K
C7502
1000P
YB
D7501
UDZS36B-TRB
C7501
10/50
ACH1402- -TRB
V+5AIR
GND
V+5V_TUNER
R7503
0
U7501
AXF1119-
GND
ANT IN
AKC1002-
K7501
TP7506
AGC
BB
ADDRESS
SCL
SDA
B
BT
IF OUT
R7525
0
R7504
33K
R7507
0
R7506
0
R7508
0
R7505
0
C7503
0.1/10
R7524
220K
C7504
2200P
C7505
2200P
C7513
0.1/50
C7506
0.1/50
C7507
220/10
ACH1368- -TRB
C7509
100/16
ACH1394- -TRB
C7596
33/10
ACH1398- -TRB
Q7536
2SC4116(YGR)-TLB
R7642
22K
29
R7641
0
R7526
150
R7536
0
TP7507
K7502
AKC1002-
F7503
VTF1179-
IN
SW IN
GND
OUT1
OUT2
R7527
0
R7538
4.7K
R7539
330
L7505
0.68U
LCTAWR68J2520-T
C7522
1000P
R7540
4.7K
C7514
0.01
R7541
4.7K
1SS356-TRB
D7502
C7523
1000P
C7524
0.01
L7520
0.22
LCTAWR22J2520-T
L7516
0.22U
C7520
1000P
Q7511
2SC4082(P)-TLB
SIF
R7546
2.2K
R7548
100
R7549
1.0K
R7550
22K
Q7509
2SC4116(YGR)-TLB
F7510
41.5MHZ
ATF1210-
F7504
30.90MHZ
VTF1180-
F7505
40.40MHZ
VTF1181-
IBD ONLY
F7506
VTF1177-
R7563
22K
R7564
4.7K
R7565
4.7K
C7536
0.01
R7547
0
R7562
470
L7507
0.68U
LCTAWR68J2520-T
C7532
33P
CH
C7534
1000P
R7636
0
C7535
1000P
D7503
1SS356-TRB
R7572
22K
Q7518
2SC4116(YGR)-TLB
L/OTHERS
OTHERS_M
Q7517
2SC4082(P)-TLB
R7570
100
VIF
R7571
1.0K
28
29
B 3/8-5/8
SCL_AV
SDA_AV
R7545
100
R7535
100
2SC4213(AB)-TLB
Q7516
R7561
0
R7560
4.7K
R7569
10K
L_LDASH
UIF_UCOM[1:72]
B 2/8-8/8
V+9AIR
C7545
0.01
V+5V_TUNER
C7555
0.1/50
R7580
0
R7581
0
DCH1165- -T
R7596
0
C7546
10/16
C7559
1500P
C7557
470P
C7556
56P
C7558
56P
C7569
3P
X7501
VSS1189-
C7570
3P
R7608
100
R7620
1.0K
R7621
0
C7547
0.1/50
C7548
10/16
DCH1165- -T
C7549
100/16
ACH1394- -TRB
C7550
0.1/50
R7582
0
C7551
0.1/50
C7552
3.3/50
ACH1385- -TRB
IC7502
MSP3417G-TBB
AVSUP
ANA_IN1+
ANA_IN-
TESTEN
XTAL_IN
XTAL_OUT
TP
D_CTR_OUT1
D_CTR_OUT0
ADR_SEL
STANDBYQ
I2C_CL
I2C_DA
MONO_IN
VREFTOP
SC1_IN_R
SC1_IN_L
NC
AGNDC
AHVSS
AHVSUP
CAPL_M
SC1_OUT_L
SC1_OUT_R
VREF1
DACM_L
DACM_R
VREF2
RESETQ
TP_CO
DVSUP
DVSS
R7579
0
R7594
470
R7595
10K
L7511
8.2
LCTAW8R2J2520-T
L7512
15
LCTAW150J2520-T
R7606
47
Q7526
2SC4116(YGR)-TLB
2SC4116(YGR)-TLB
Q7530
R7607
4.7K
C7567
47P
C7568
120P
C7575
0.1
C7576
68P
C7577
0.1/50
C7578
180P
R7619
220
L7513
15
LCTAW150J2520-T
L7514
4.7
LCTAW4R7J2520-T
C7587
10/16
DCH1165- -T
C7588
1500P
C7589
470P
C7590
220P
R7627
0
R7625
100
R7626
100
GND

B 1/8

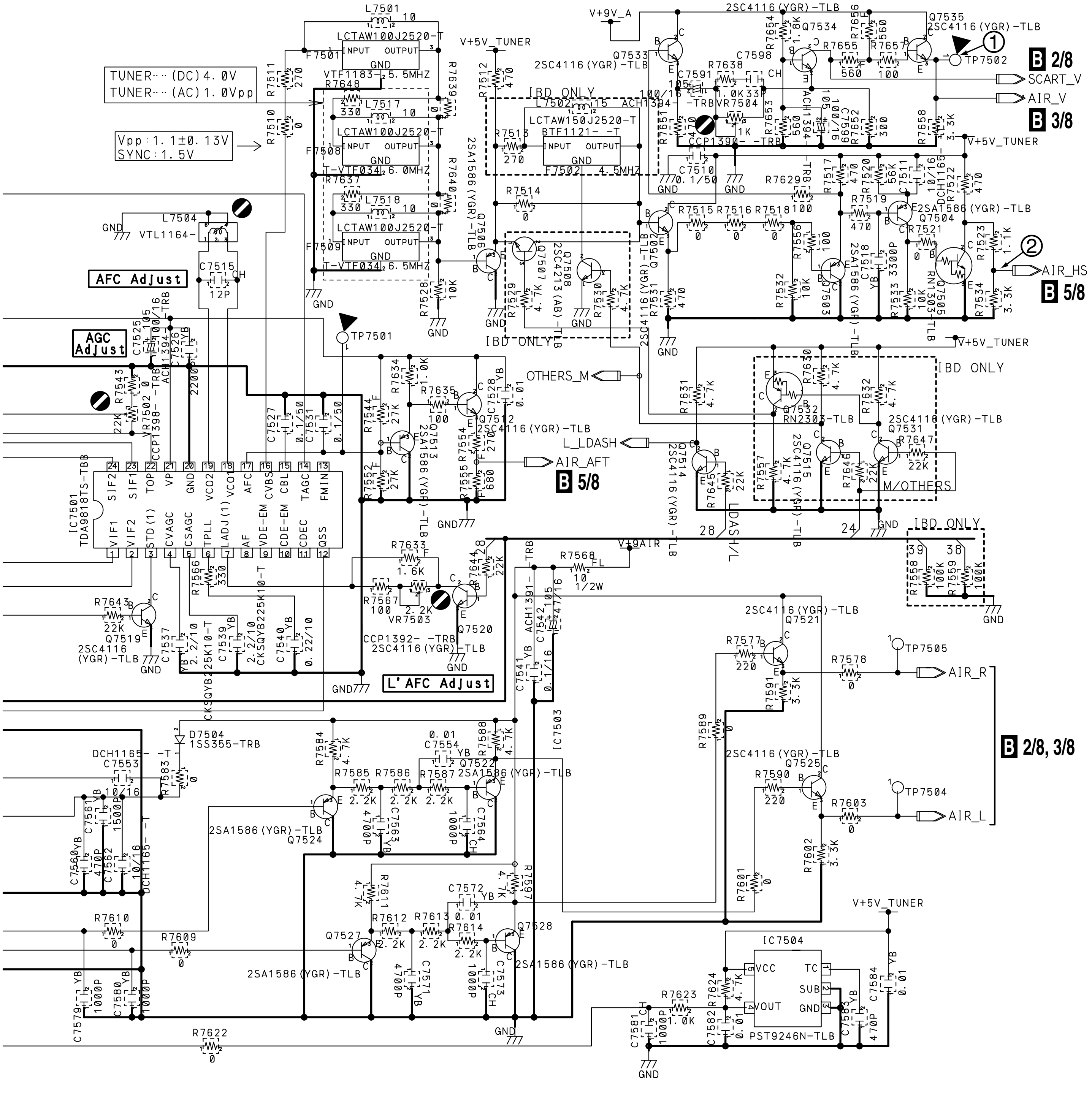
TUNER･･･(DC)4.0V
TUNER･･･(AC)1.0Vpp
Vpp:1.1±0.13V
SYNC:1.5V
AFC Adjust
AGC Adjust
L'AFC Adjust
IBD ONLY
IC7501
TDA9818TS-TBB
IC7503
IC7504
PST9246N-TLB
V+9V_A
V+5V_TUNER
V+9AIR
TP7501
TP7502
TP7504
TP7505
SCART_V
AIR_V
AIR_HS
AIR_AFT
OTHERS_M
L_LDASH
AIR_R
AIR_L
M/OTHERS
LDASH/L
B 2/8
B 3/8
B 5/8
B 2/8, 3/8
①
②
L7501
L7502
L7504
L7517
L7518
F7501
F7502
F7508
F7509
LCTAW100J2520-T
LCTAW150J2520-T
VTF1183-
BTF1121- -T
T-VTF034
VTL1164-
5.5MHZ
6.0MHZ
6.5MHZ
4.5MHZ
VR7502
VR7503
VR7504
CCP1398- -TRB
CCP1390- -TRB
CCP1392- -TRB
ACH1394- -TRB
ACH1391- -TRB
DCH1165- -T
D7504
1SS355-TRB
Q7502
Q7503
Q7504
Q7505
Q7506
Q7507
Q7508
Q7512
Q7513
Q7514
Q7515
Q7519
Q7520
Q7521
Q7522
Q7524
Q7525
Q7527
Q7528
Q7531
Q7532
Q7533
Q7534
Q7535
2SC4116(YGR)-TLB
2SA1586(YGR)-TLB
2SC4213(AB)-TLB
RN1303-TLB
RN2303-TLB
SIF2
SIF1
TOP
VP
GND
VCO2
VCO1
AFC
CVBS
CBL
TAGC
FMIN
VIF1
VIF2
STD(1)
CVAGC
CSAGC
TPLL
LADJ(1)
AF
VDE-EM
CDE-EM
CDEC
QSS
VCC
TC
SUB
VOUT
INPUT
OUTPUT

3.17 AV BOARD ASSY (2/8)

B 2/8 AV BOARD ASSY (AWZ6813)

● AV I/O BLOCK

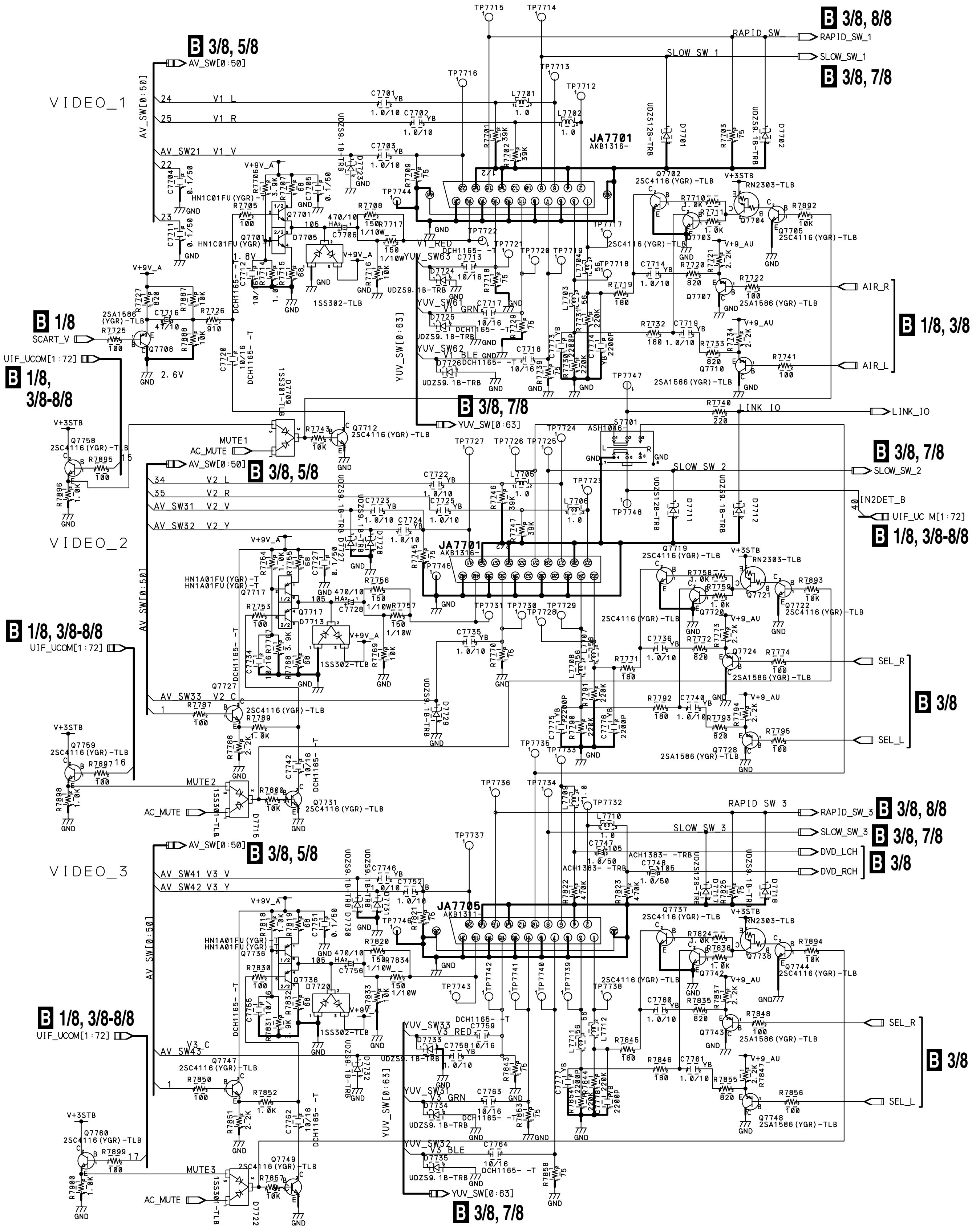
B 3/8, 5/8
AV_SW[0:50]
VIDEO_1
V1_L
V1_R
AV_SW21 V1_V
B 3/8, 8/8
RAPID_SW
RAPID_SW_1
SLOW_SW_1
SLOW_SW_1
B 3/8, 7/8
JA7701
AKB1316-
TP7715
TP7714
TP7713
TP7716
TP7712
D7701
D7702
UDZS12B-TRB
UDZS9.1B-TRB
2SC4116(YGR)-TLB
RN2303-TLB
V+3STB
V+9V_A
V+9_AU
HN1C01FU(YGR)
1SS302-TLB
DCH1165-T
V1_RED
V1_GRN
V1_BLE
YUV_SW63
YUV_SW61
YUV_SW62
YUV_SW[0:63]
AIR_R
AIR_L
B 1/8, 3/8
B 1/8
SCART_V
UIF_UCOM[1:72]
B 1/8, 3/8-8/8
2SA1586(YGR)-TLB
LINK_IO
LINK_IO
MUTE1
AC_MUTE
B 3/8, 5/8
S7701
ASH1046
SLOW_SW_2
SLOW_SW_2
B 3/8, 7/8
IN2DET_B
UIF_UCOM[1:72]
B 1/8, 3/8-8/8
VIDEO_2
V2_L
V2_R
AV_SW31 V2_V
AV_SW32 V2_Y
AV_SW33 V2_C
HN1A01FU(YGR)-T
SEL_R
SEL_L
B 3/8
MUTE2
AC_MUTE
RAPID_SW_3
RAPID_SW_3
B 3/8, 8/8
SLOW_SW_3
SLOW_SW_3
B 3/8, 7/8
DVD_LCH
DVD_RCH
B 3/8
ACH1383-TRB
VIDEO_3
AV_SW41 V3_V
AV_SW42 V3_Y
AV_SW43 V3_C
JA7705
AKB1311-
YUV_SW33
YUV_SW31
YUV_SW32
V3_RED
V3_GRN
V3_BLE
YUV_SW[0:63]
B 3/8, 7/8
SEL_R
SEL_L
B 3/8
MUTE3
AC_MUTE
B 1/8, 3/8-8/8
UIF_UCOM[1:72]
GND

B 2/8

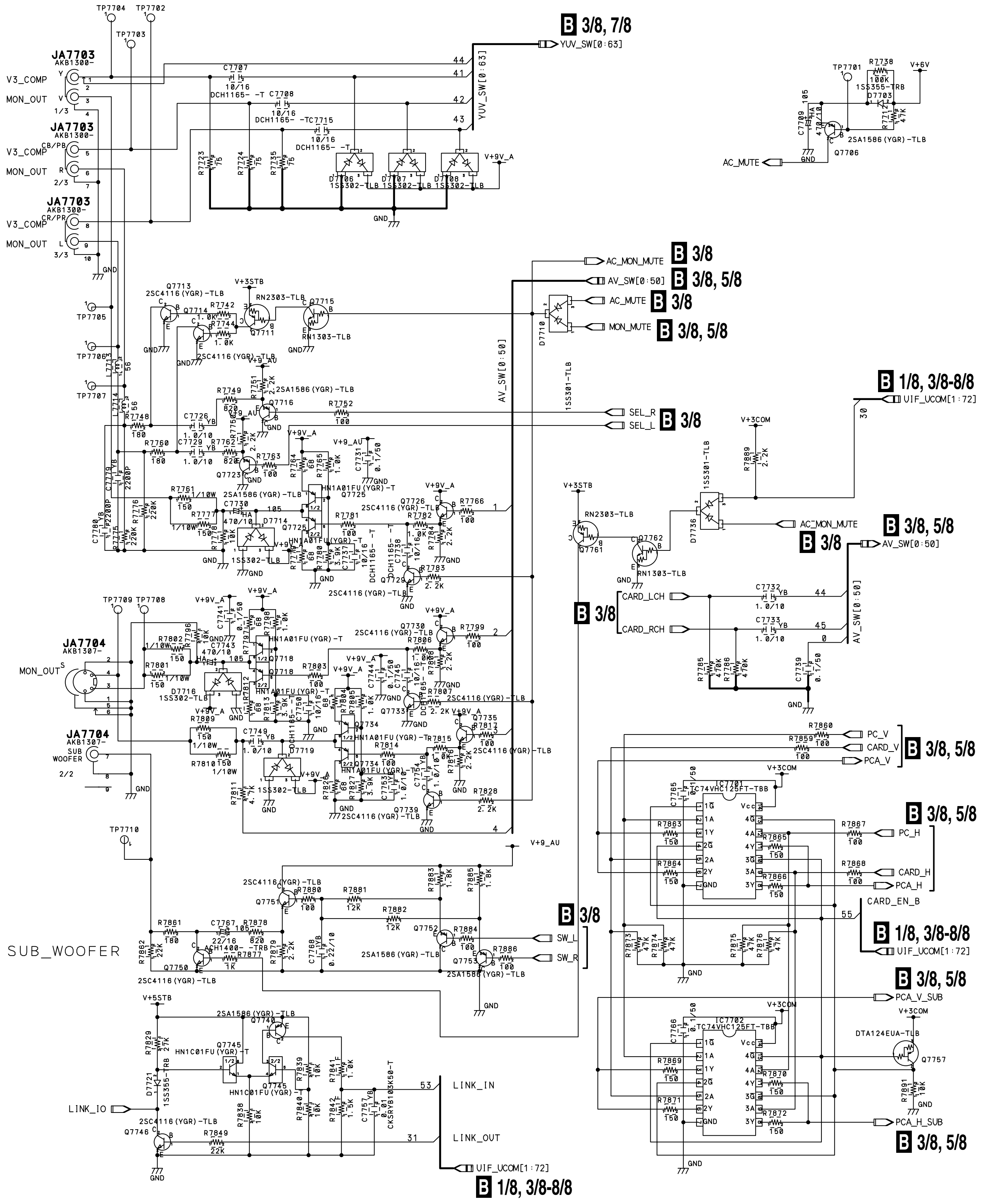
B 3/8, 7/8
YUV_SW[0:63]
JA7703 AKB1300-
V3_COMP
MON_OUT
TP7704
TP7702
TP7703
C7707 10/16 DCH1165- -T
C7708 10/16 DCH1165- -T
C7715 10/16 DCH1165- -T
D7706 1SS302-TLB
D7707 1SS302-TLB
D7708 1SS302-TLB
V+9V_A
GND
TP7701
R7738 100K
V+6V
1SS355-TRB
D7703
C7709 470/10
R7712 47K
2SA1586(YGR)-TLB
Q7706
AC_MUTE
AC_MON_MUTE B 3/8
AV_SW[0:50] B 3/8, 5/8
AC_MUTE B 3/8
MON_MUTE B 3/8, 5/8
D7710
Q7713 2SC4116(YGR)-TLB
Q7714
Q7711 RN2303-TLB
Q7715 RN1303-TLB
V+3STB
TP7705
TP7706
TP7707
V+9_AU
Q7716 2SA1586(YGR)-TLB
SEL_R B 3/8
SEL_L
1SS301-TLB
B 1/8, 3/8-8/8
UIF_UCOM[1:72]
V+3COM
R7889 2.2K
D7736
AC_MON_MUTE
B 3/8, 5/8
B 3/8
AV_SW[0:50]
RN2303-TLB Q7761
Q7762 RN1303-TLB
HN1A01FU(YGR)-T
Q7725
Q7726 2SC4116(YGR)-TLB
Q7729 2SC4116(YGR)-TLB
D7714 1SS302-TLB
B 3/8
CARD_LCH
CARD_RCH
C7732 1.0/10
C7733 1.0/10
R7785 470K
R7786 470K
C7739 0.1/50
TP7709
TP7708
JA7704 AKB1307-
MON_OUT
D7716 1SS302-TLB
Q7718 HN1A01FU(YGR)-T
Q7730 2SC4116(YGR)-TLB
Q7733 2SC4116(YGR)-TLB
Q7734 HN1A01FU(YGR)-T
Q7735 2SC4116(YGR)-TLB
Q7739 2SC4116(YGR)-TLB
D7719 1SS302-TLB
JA7704 AKB1307-
SUB WOOFER
PC_V
CARD_V B 3/8, 5/8
PCA_V
IC7701 TC74VHC125FT-TBB
B 3/8, 5/8
PC_H
CARD_H
PCA_H
CARD_EN_B
B 1/8, 3/8-8/8
UIF_UCOM[1:72]
TP7710
V+9_AU
Q7751 2SC4116(YGR)-TLB
Q7752 2SA1586(YGR)-TLB
Q7753 2SA1586(YGR)-TLB
Q7750 2SC4116(YGR)-TLB
B 3/8
SW_L
SW_R
SUB_WOOFER
B 3/8, 5/8
PCA_V_SUB
IC7702 TC74VHC125FT-TBB
DTA124EUA-TLB
Q7757
PCA_H_SUB
B 3/8, 5/8
V+5STB
Q7740 2SA1586(YGR)-TLB
Q7745 HN1C01FU(YGR)-T
D7721 1SS355-TRB
LINK_IO
Q7746 2SC4116(YGR)-TLB
R7849 22K
C7757 0.01 CKSRYB103K50-T
LINK_IN
LINK_OUT
UIF_UCOM[1:72]
B 1/8, 3/8-8/8

B 2/8

3.18 AV BOARD ASSY (3/8)

B 3/8 AV BOARD ASSY (AWZ6813)

● SW BLOCK

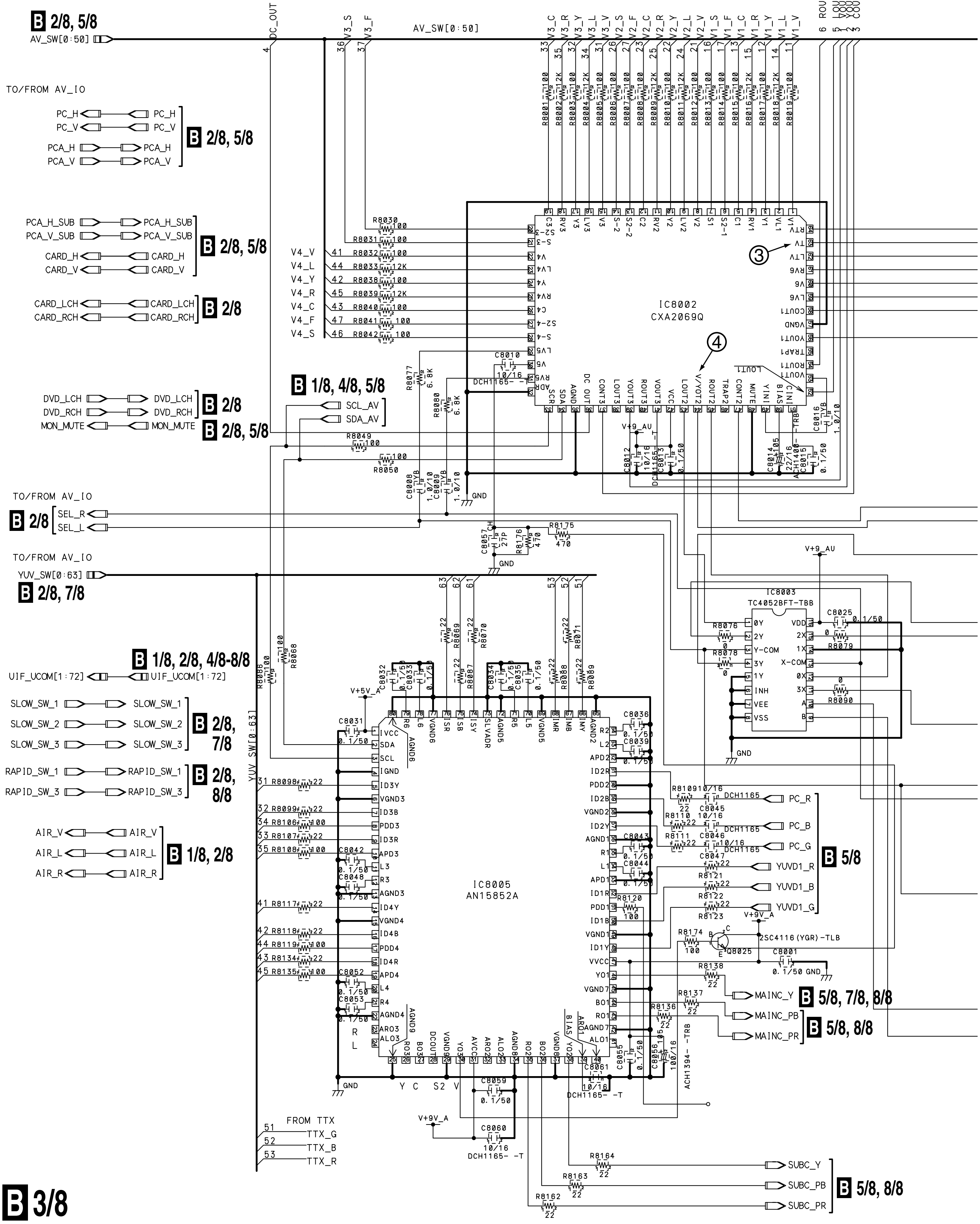
B 2/8, 5/8
AV_SW[0:50]
DC_OUT
V3_S
V3_F
V3_C
V3_R
V3_Y
V3_L
V3_V
V2_S
V2_F
V2_C
V2_R
V2_Y
V2_L
V2_V
V1_S
V1_F
V1_C
V1_R
V1_Y
V1_L
V1_V
ROUT1
LOUT1
YOUT3
COUT3
TO/FROM AV_IO
PC_H
PC_V
PCA_H
PCA_V
PCA_H_SUB
PCA_V_SUB
CARD_H
CARD_V
B 2/8, 5/8
CARD_LCH
CARD_RCH
B 2/8
V4_V
V4_L
V4_Y
V4_R
V4_C
V4_F
V4_S
IC8002
CXA2069Q
③
④
B 1/8, 4/8, 5/8
SCL_AV
SDA_AV
DVD_LCH
DVD_RCH
B 2/8
MON_MUTE
B 2/8, 5/8
V+9_AU
GND
TO/FROM AV_IO
B 2/8
SEL_R
SEL_L
TO/FROM AV_IO
YUV_SW[0:63]
B 2/8, 7/8
B 1/8, 2/8, 4/8-8/8
UIF_UCOM[1:72]
SLOW_SW_1
SLOW_SW_2
SLOW_SW_3
B 2/8, 7/8
RAPID_SW_1
RAPID_SW_3
B 2/8, 8/8
AIR_V
AIR_L
AIR_R
B 1/8, 2/8
IC8003
TC4052BFT-TBB
IC8005
AN15852A
V+5V_A
V+9V_A
PC_R
PC_B
PC_G
B 5/8
YUVD1_R
YUVD1_B
YUVD1_G
2SC4116(YGR)-TLB
Q8025
MAINC_Y
B 5/8, 7/8, 8/8
MAINC_PB
MAINC_PR
B 5/8, 8/8
FROM TTX
TTX_G
TTX_B
TTX_R
SUBC_Y
SUBC_PB
SUBC_PR
B 5/8, 8/8
DCH1165- -T
ACH1394- -TRB

B 3/8

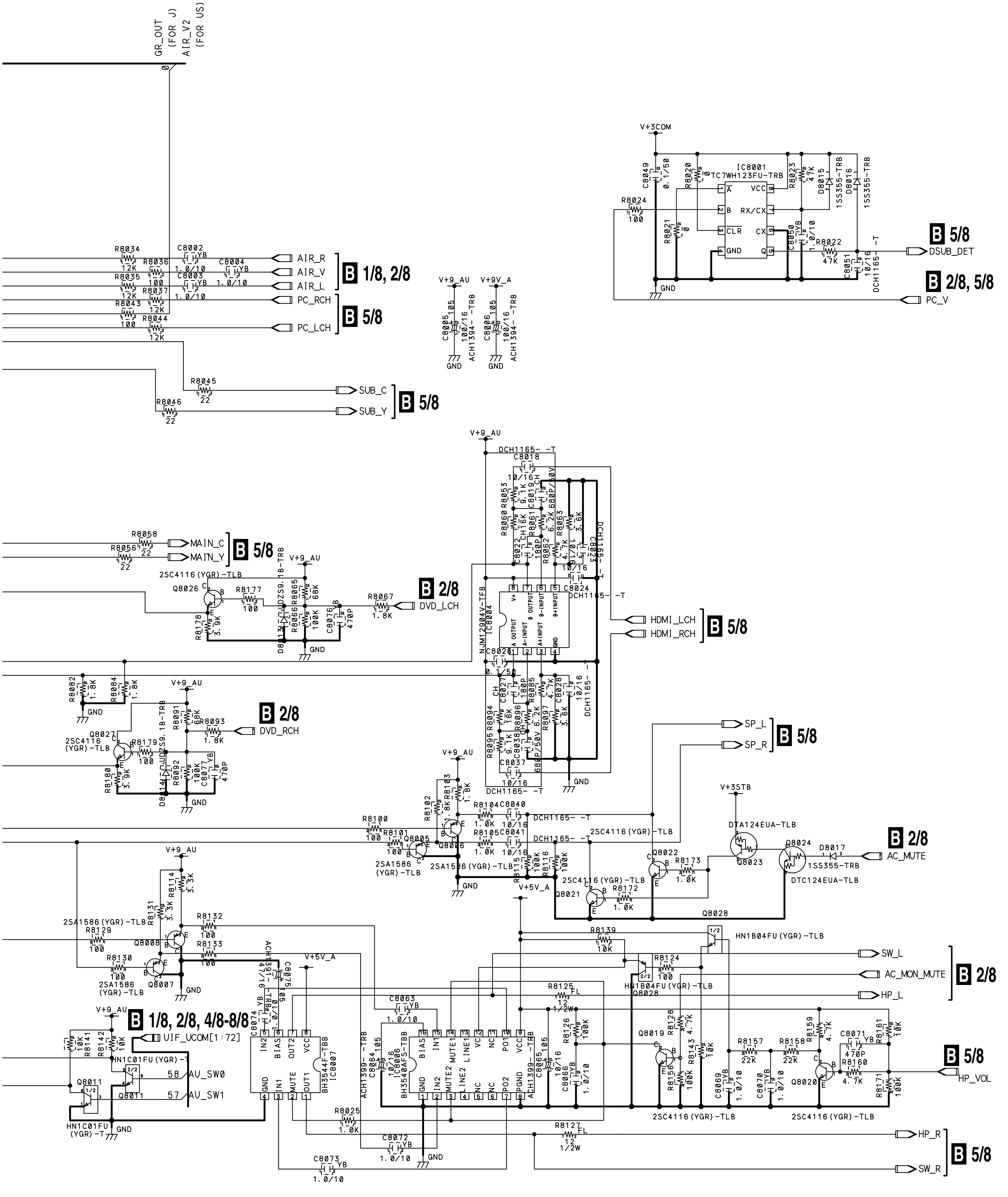
GR_OUT (FOR J)
AIR_V2 (FOR US)
V+3COM
C8049 0.1/50
R8020 0
IC8001 TC7WH123FU-TRB
A VCC
B RX/CX
CLR CX
GND Q
R8023 47K
D8015 1SS355-TRB
D8016 1SS355-TRB
R8024 100
R8021 0
C8050 1.0/10 YB
R8022 47K
C8051 10/16 DCH1165- -T
GND
DSUB_DET
B 5/8
PC_V
B 2/8, 5/8
R8034 12K
R8036 100
R8035 12K
R8037 12K
R8043 100
R8044 12K
C8002 1.0/10 YB
C8003 1.0/10 YB
C8004 1.0/10 YB
AIR_R
AIR_V
AIR_L
B 1/8, 2/8
PC_RCH
PC_LCH
B 5/8
V+9_AU
V+9V_A
C8005 105 100/16 ACH1394- -TRB
C8006 105 100/16 ACH1394- -TRB
GND
R8045 22
R8046 22
SUB_C
SUB_Y
B 5/8
V+9_AU
DCH1165- -T
C8018 10/16
R8053 9.1K
C8019 680P/50V CH
R8060 16K
R8061 6.2K
R8063 3.6K
C8022 CH 180P
R8062 4.7K
C8023 10/16
C8024 10/16 DCH1165- -T
IC8004 NJM12904V-TFB
A OUTPUT A-INPUT A+INPUT GND B+INPUT B-INPUT B OUTPUT V+
C8026 0.1/50
C8027 CH 180P
R8085 4.7K
C8028 10/16 DCH1165- -T
R8094 16K
R8096 6.2K
R8097 3.6K
R8095 9.1K
C8038 680P/50V CH
C8037 10/16 DCH1165- -T
GND
HDMI_LCH
HDMI_RCH
B 5/8
R8058 22
R8056 22
MAIN_C
MAIN_Y
B 5/8
2SC4116(YGR)-TLB
Q8026
R8177 100
R8178 3.9K
D8013 UDZS9.1B-TRB
R8065 68K
R8066 100K
C8076 470P B
R8067 1.8K
DVD_LCH
B 2/8
GND
R8082 1.8K
R8084 1.8K
GND
V+9_AU
Q8027 2SC4116 (YGR)-TLB
R8179 100
R8180 3.9K
D8014 UDZS9.1B-TRB
R8091 68K
R8092 100K
C8077 470P YB
R8093 1.8K
DVD_RCH
B 2/8
GND
SP_L
SP_R
B 5/8
V+9_AU
R8102 1.8K
R8103 1.8K
R8100 100
R8101 100
Q8005 2SA1586 (YGR)-TLB
Q8006 2SA1586(YGR)-TLB
R8104 1.0K
C8040 10/16 DCH1165- -T
R8105 1.0K
C8041 10/16 DCH1165- -T
R8115 100K
R8116 100K
GND
V+5V_A
V+3STB
DTA124EUA-TLB
Q8023
Q8024 DTC124EUA-TLB
D8017 1SS355-TRB
AC_MUTE
B 2/8
2SC4116(YGR)-TLB
Q8022
R8173 1.0K
Q8021 2SC4116(YGR)-TLB
R8172 1.0K
Q8028
V+9_AU
R8114 3.3K
R8131 3.3K
2SA1586(YGR)-TLB
R8129 100
Q8008
R8132 100
R8133 100
R8130 100
Q8007 2SA1586 (YGR)-TLB
GND
C8075 47/16 ACH1391- -TRB
C8074 1.0/10 YB
V+5V_A
IC8007 BH3544F-TBB
IN2 BIAS OUT2 VCC GND IN1 MUTE OUT1
R8139 10K
HN1B04FU(YGR)-TLB
R8124 100
Q8028 HN1B04FU(YGR)-TLB
SW_L
AC_MON_MUTE
HP_L
B 2/8
R8125 12 1/2W FL
C8063 1.0/10 YB
C8064 105 10/16 ACH1399- -TRB
IC8006 BH3540AFS-TBB
BIAS IN1 MUTE1 LINE1 VC NC PO1 VCC GND IN2 MUTE2 LINE2 NC NC PO2 PGND
C8065 105 10/16 ACH1399- -TBB
C8066 1.0/10 YB
R8126 100K
Q8019
R8128 4.7K
R8143 10K
R8156 100K
C8069 1.0/10 YB
C8070 1.0/10 YB
R8157 22K
R8158 22K
R8159 4.7K
C8071 470P YB
R8160 4.7K
R8161 10K
R8171 100K
Q8020
HP_VOL
B 5/8
2SC4116(YGR)-TLB
2SC4116(YGR)-TLB
V+9_AU
R8141 10K
R8142 10K
B 1/8, 2/8, 4/8-8/8
UIF_UCOM[1:72]
HN1C01FU(YGR)-T
58 AU_SW0
57 AU_SW1
Q8011
HN1C01FU (YGR)-T
GND
R8025 1.0K
C8072 1.0/10 YB
GND
C8073 1.0/10 YB
R8127 12 1/2W FL
HP_R
SW_R
B 5/8

B 3/8

3.19 AV BOARD ASSY (4/8)

B 4/8 AV BOARD ASSY (AWZ6813)

● AV_REG BLOCK

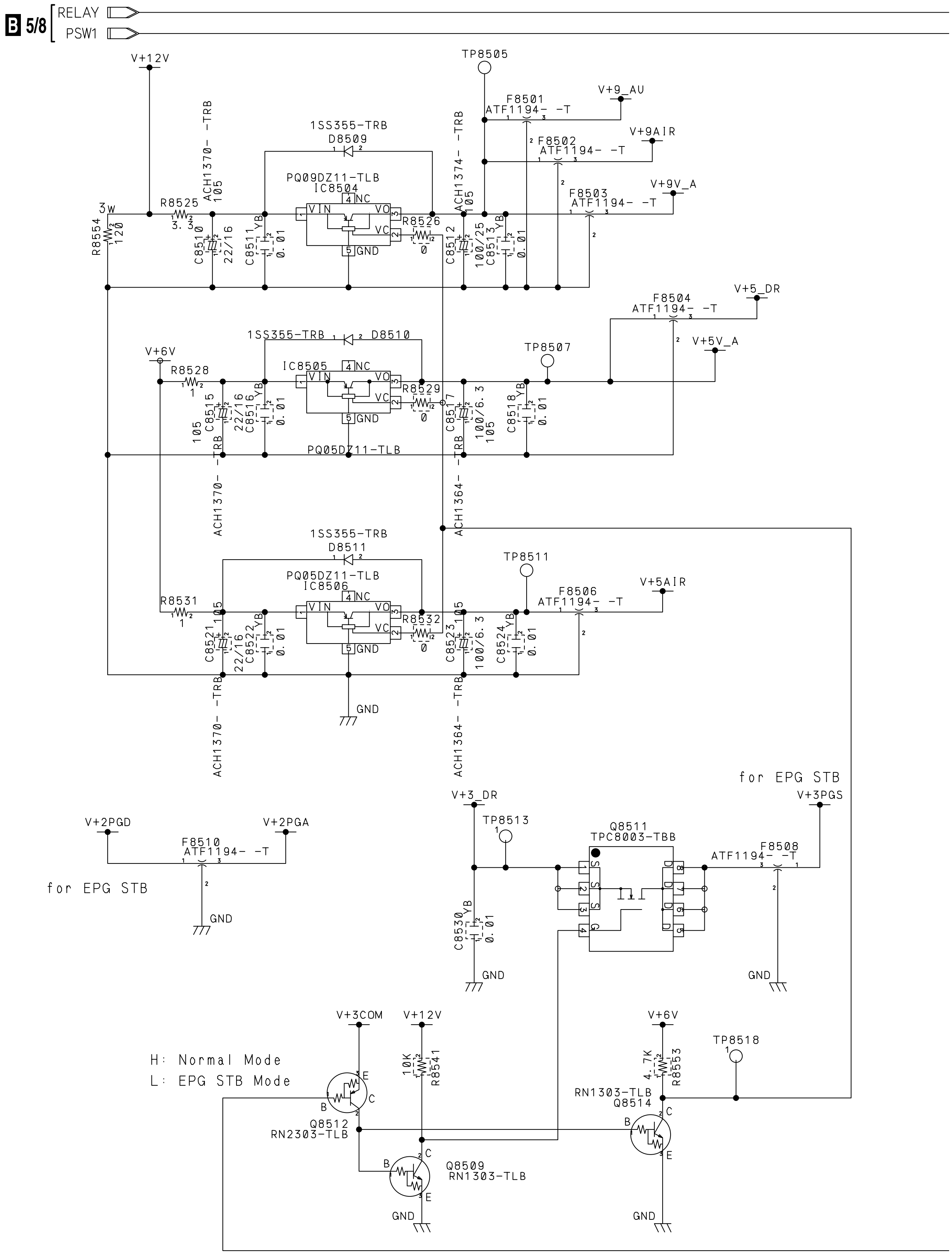
B 5/8
RELAY
PSW1
V+12V
TP8505
F8501
ATF1194- -T
V+9_AU
F8502
ATF1194- -T
V+9AIR
F8503
ATF1194- -T
V+9V_A
1SS355-TRB
D8509
PQ09DZ11-TLB
IC8504
VIN
NC
VO
VC
GND
R8525
3.3
3w
R8554
120
ACH1370- -TRB
105
C8510
22/16
C8511
YB
0.01
R8526
0
ACH1374- -TRB
105
C8512
100/25
C8513
YB
0.01
F8504
ATF1194- -T
V+5_DR
1SS355-TRB
D8510
V+6V
R8528
1
IC8505
R8529
0
TP8507
V+5V_A
C8515
105
22/16
C8516
YB
0.01
C8517
100/6.3
105
C8518
YB
0.01
ACH1370- -TRB
PQ05DZ11-TLB
ACH1364- -TRB
1SS355-TRB
D8511
PQ05DZ11-TLB
IC8506
TP8511
F8506
ATF1194- -T
V+5AIR
R8531
1
R8532
0
C8521
105
22/16
C8522
YB
0.01
C8523
105
100/6.3
C8524
YB
0.01
GND
ACH1370- -TRB
ACH1364- -TRB
for EPG STB
V+3PGS
V+3_DR
TP8513
Q8511
TPC8003-TBB
F8508
ATF1194- -T
V+2PGD
V+2PGA
F8510
ATF1194- -T
for EPG STB
GND
C8530
YB
0.01
GND
GND
V+3COM
V+12V
10K
R8541
V+6V
4.7K
R8553
TP8518
H: Normal Mode
L: EPG STB Mode
Q8512
RN2303-TLB
RN1303-TLB
Q8514
Q8509
RN1303-TLB
GND
GND

B 4/8

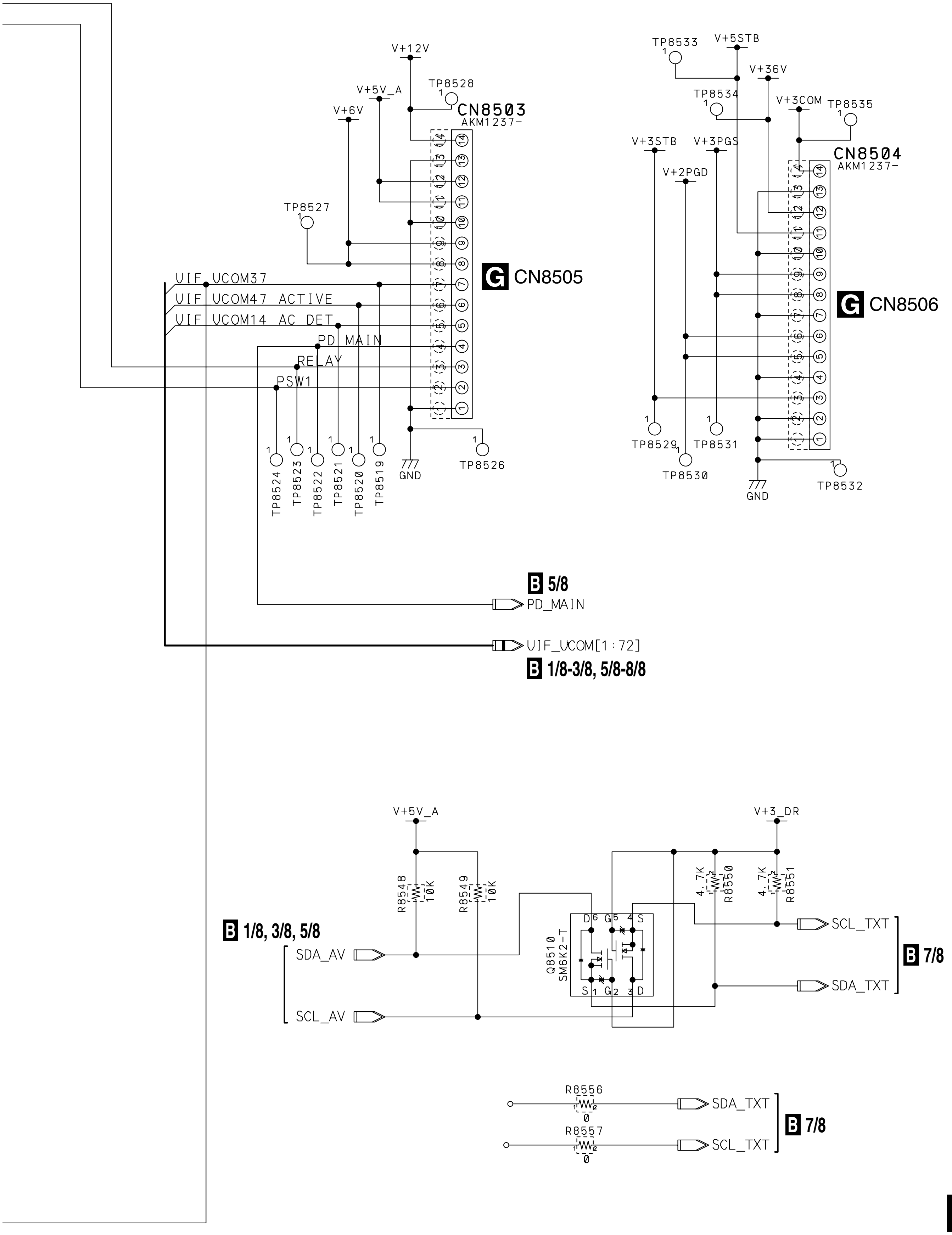
V+12V
V+5V_A
V+6V
TP8528
CN8503
AKM1237-
TP8527
UIF_UCOM37
UIF_UCOM47_ACTIVE
UIF_UCOM14_AC_DET
PD_MAIN
RELAY
PSW1
G CN8505
TP8524
TP8523
TP8522
TP8521
TP8520
TP8519
GND
TP8526
TP8533
V+5STB
V+36V
TP8534
V+3COM
TP8535
V+3STB
V+3PGS
V+2PGD
CN8504
AKM1237-
G CN8506
TP8529
TP8531
TP8530
GND
TP8532
B 5/8
PD_MAIN
UIF_UCOM[1:72]
B 1/8-3/8, 5/8-8/8
V+5V_A
V+3_DR
R8548
10K
R8549
10K
4.7K
R8550
4.7K
R8551
B 1/8, 3/8, 5/8
SDA_AV
SCL_AV
Q8510
SM6K2-T
D 6 G 5 4 S
S 1 G 2 3 D
SCL_TXT
SDA_TXT
B 7/8
R8556
0
SDA_TXT
R8557
0
SCL_TXT
B 7/8

B 4/8

3.20 AV BOARD ASSY (5/8)

B 5/8 AV BOARD ASSY (AWZ6813)

● **IF BLOCK**

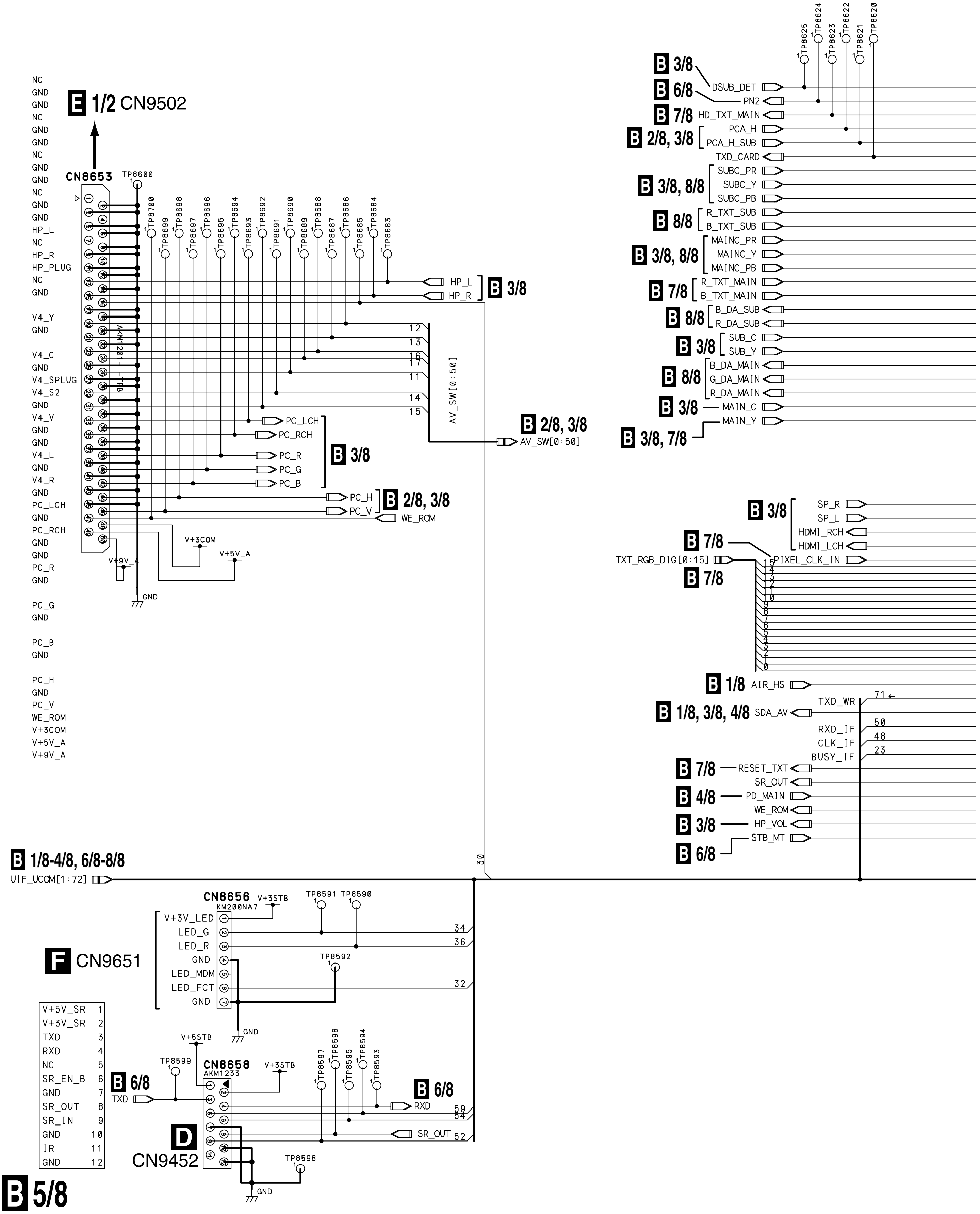
NC
GND
GND
NC
GND
GND
NC
GND
GND
NC
GND
GND
HP_L
NC
HP_R
HP_PLUG
NC
GND
V4_Y
GND
V4_C
GND
V4_SPLUG
V4_S2
GND
V4_V
GND
GND
V4_L
GND
V4_R
GND
PC_LCH
GND
PC_RCH
GND
GND
PC_R
GND
PC_G
GND
PC_B
GND
PC_H
GND
PC_V
WE_ROM
V+3COM
V+5V_A
V+9V_A
E 1/2 CN9502
CN8653
AKM1201-1-TAB
TP8600
TP8700
TP8699
TP8698
TP8697
TP8696
TP8695
TP8694
TP8693
TP8692
TP8691
TP8690
TP8689
TP8688
TP8687
TP8686
TP8685
TP8684
TP8683
HP_L
HP_R
B 3/8
12
13
16
17
11
14
15
AV_SW[0:50]
B 2/8, 3/8
AV_SW[0:50]
PC_LCH
PC_RCH
PC_R
PC_G
PC_B
B 3/8
PC_H
PC_V
B 2/8, 3/8
WE_ROM
V+3COM
V+5V_A
V+9V_A
GND
TP8625
TP8624
TP8623
TP8622
TP8621
TP8620
B 3/8
DSUB_DET
B 6/8
PN2
B 7/8
HD_TXT_MAIN
B 2/8, 3/8
PCA_H
PCA_H_SUB
TXD_CARD
B 3/8, 8/8
SUBC_PR
SUBC_Y
SUBC_PB
B 8/8
R_TXT_SUB
B_TXT_SUB
B 3/8, 8/8
MAINC_PR
MAINC_Y
MAINC_PB
B 7/8
R_TXT_MAIN
B_TXT_MAIN
B 8/8
B_DA_SUB
R_DA_SUB
B 3/8
SUB_C
SUB_Y
B 8/8
B_DA_MAIN
G_DA_MAIN
R_DA_MAIN
B 3/8
MAIN_C
B 3/8, 7/8
MAIN_Y
B 3/8
SP_R
SP_L
HDMI_RCH
HDMI_LCH
B 7/8
PIXEL_CLK_IN
TXT_RGB_DIG[0:15]
B 7/8
15
14
13
12
11
10
9
8
7
6
5
4
3
2
1
0
B 1/8
AIR_HS
TXD_WR
71
B 1/8, 3/8, 4/8
SDA_AV
RXD_IF
50
CLK_IF
48
BUSY_IF
23
B 7/8
RESET_TXT
SR_OUT
B 4/8
PD_MAIN
WE_ROM
B 3/8
HP_VOL
B 6/8
STB_MT
B 1/8-4/8, 6/8-8/8
UIF_UCOM[1:72]
30
CN8656
KM200NA7
V+3STB
TP8591
TP8590
V+3V_LED
LED_G
LED_R
GND
LED_MDM
LED_FCT
GND
34
36
TP8592
32
F CN9651
GND
V+5V_SR 1
V+3V_SR 2
TXD 3
RXD 4
NC 5
SR_EN_B 6
GND 7
SR_OUT 8
SR_IN 9
GND 10
IR 11
GND 12
V+5STB
TP8599
CN8658
AKM1233
V+3STB
TP8597
TP8596
TP8595
TP8594
TP8593
B 6/8
TXD
B 6/8
RXD
59
54
SR_OUT
52
D CN9452
TP8598
GND
B 5/8

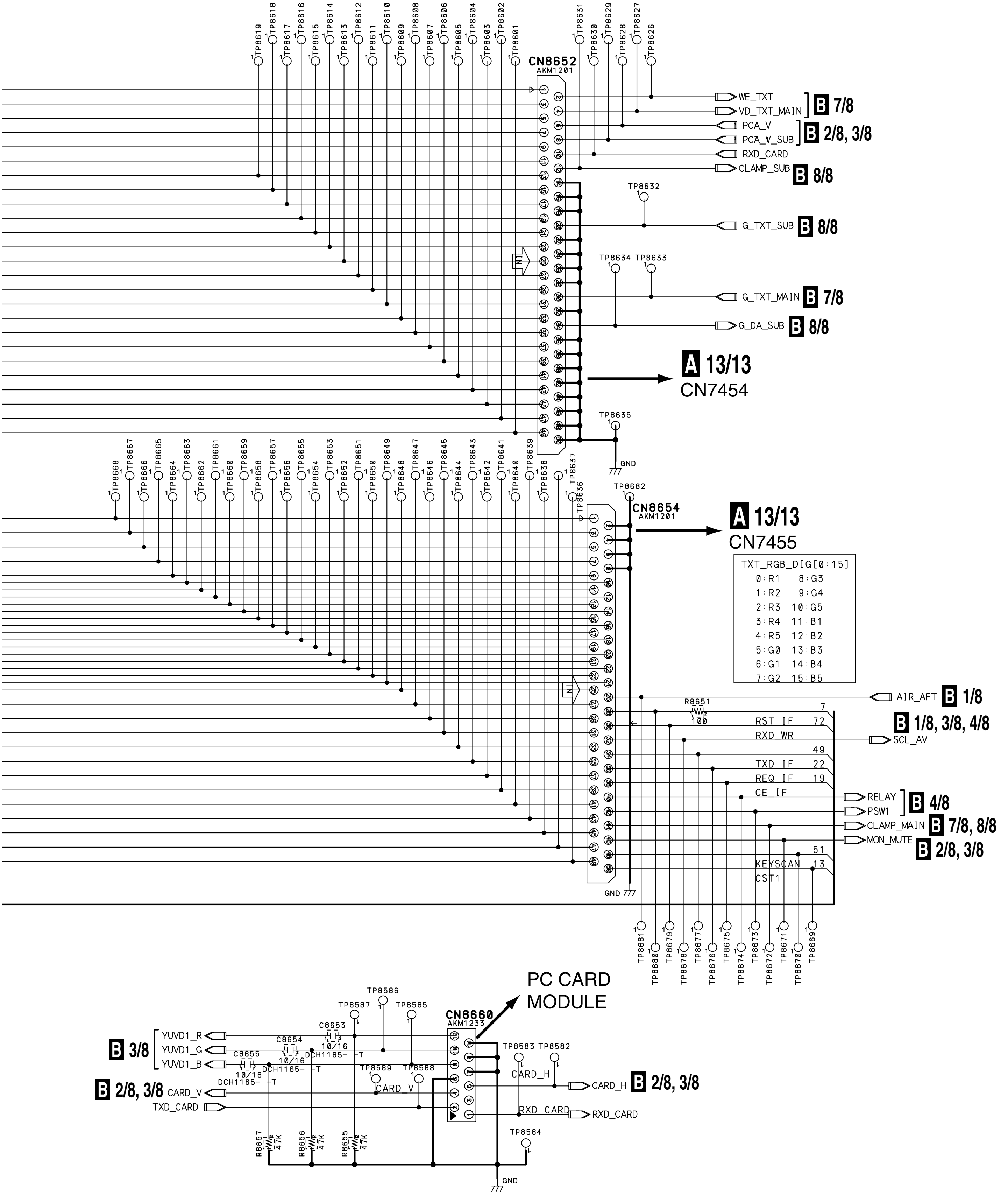
CN8652
AKM1201
TP8601 TP8602 TP8603 TP8604 TP8605 TP8606 TP8607 TP8608 TP8609 TP8610 TP8611 TP8612 TP8613 TP8614 TP8615 TP8616 TP8617 TP8618 TP8619
TP8626 TP8627 TP8628 TP8629 TP8630 TP8631
WE_TXT
VD_TXT_MAIN
B 7/8
PCA_V
PCA_V_SUB
B 2/8, 3/8
RXD_CARD
CLAMP_SUB
B 8/8
TP8632
G_TXT_SUB
B 8/8
TP8634 TP8633
G_TXT_MAIN
B 7/8
G_DA_SUB
B 8/8
A 13/13
CN7454
TP8635
GND
TP8636 TP8637 TP8638 TP8639 TP8640 TP8641 TP8642 TP8643 TP8644 TP8645 TP8646 TP8647 TP8648 TP8649 TP8650 TP8651 TP8652 TP8653 TP8654 TP8655 TP8656 TP8657 TP8658 TP8659 TP8660 TP8661 TP8662 TP8663 TP8664 TP8665 TP8666 TP8667 TP8668
TP8682
CN8654
AKM1201
A 13/13
CN7455
AIR_AFT
B 1/8
R8651
100
RST IF
RXD WR
TXD IF
REQ IF
CE IF
KEYSCAN
CST1
7 72 49 22 19 51 13
B 1/8, 3/8, 4/8
SCL_AV
RELAY
PSW1
B 4/8
CLAMP_MAIN
B 7/8, 8/8
MON_MUTE
B 2/8, 3/8
GND
TP8669 TP8670 TP8671 TP8672 TP8673 TP8674 TP8675 TP8676 TP8677 TP8678 TP8679 TP8680 TP8681
PC CARD
MODULE
CN8660
AKM1233
TP8586 TP8587 TP8585
C8653
C8654
C8655
10/16
DCH1165- -T
B 3/8
YUVD1_R
YUVD1_G
YUVD1_B
TP8583 TP8582
CARD_H
CARD_H
B 2/8, 3/8
TP8589 TP8588
CARD_V
B 2/8, 3/8
CARD_V
TXD_CARD
RXD_CARD
RXD_CARD
TP8584
R8657 47K
R8656 47K
R8655 47K
GND

TXT_RGB_DIG[0:15]	
0:R1	8:G3
1:R2	9:G4
2:R3	10:G5
3:R4	11:B1
4:R5	12:B2
5:G0	13:B3
6:G1	14:B4
7:G2	15:B5

B 5/8

3.21 AV BOARD ASSY (6/8)

B 6/8 AV BOARD ASSY (AWZ6813)

- **UCOM BLOCK**

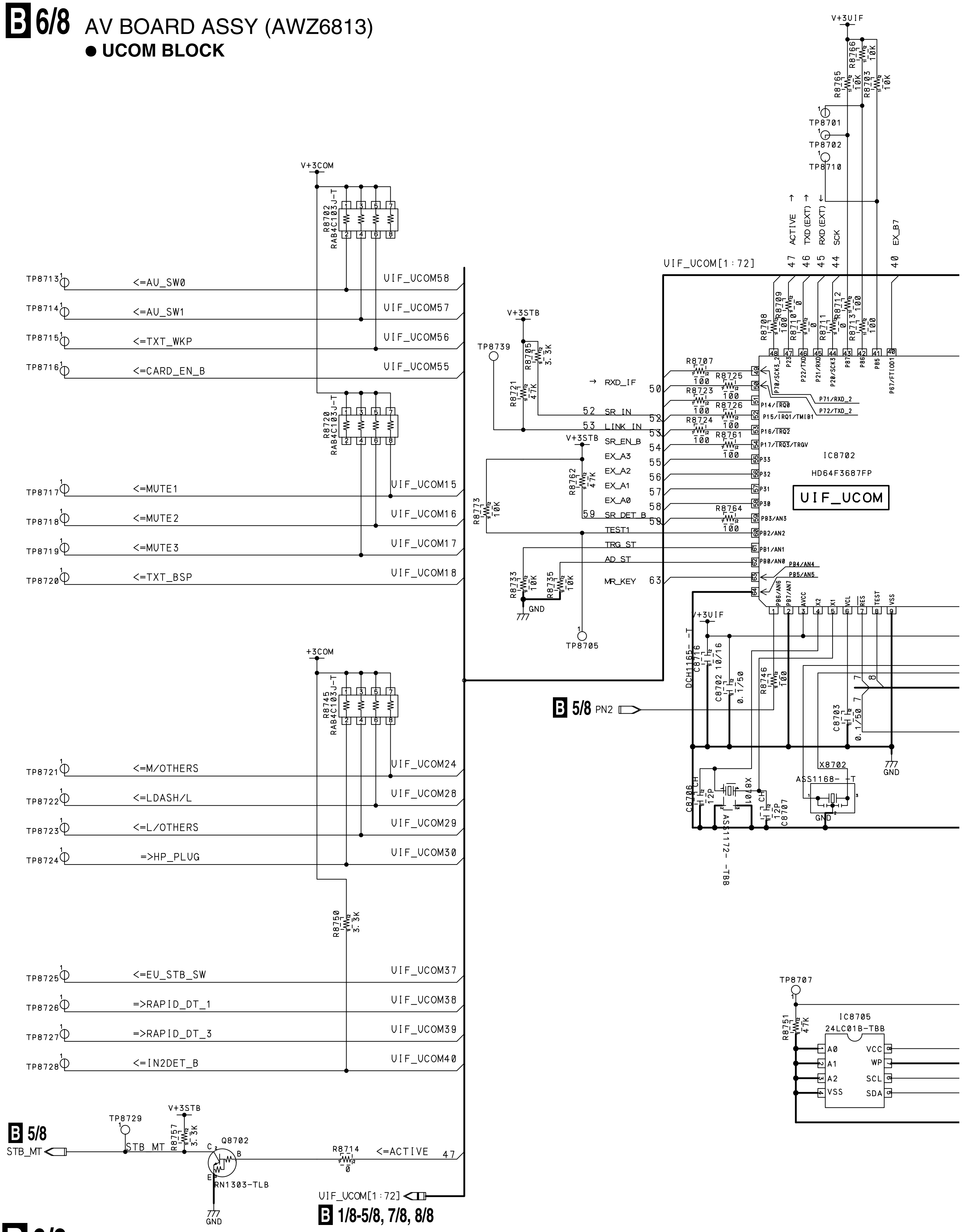
V+3UIF
R8765 10K
R8766 10K
R8703 10K
TP8701
TP8702
TP8710
ACTIVE →
TXD (EXT) →
RXD (EXT) ←
SCK
EX_B7
47 46 45 44 40
UIF_UCOM[1:72]
V+3COM
R8702 RAB4C103J-T
TP8713 <=AU_SW0 UIF_UCOM58
TP8714 <=AU_SW1 UIF_UCOM57
TP8715 <=TXT_WKP UIF_UCOM56
TP8716 <=CARD_EN_B UIF_UCOM55
R8720 RAB4C103J-T
TP8717 <=MUTE1 UIF_UCOM15
TP8718 <=MUTE2 UIF_UCOM16
TP8719 <=MUTE3 UIF_UCOM17
TP8720 <=TXT_BSP UIF_UCOM18
+3COM
R8745 RAB4C103J-T
TP8721 <=M/OTHERS UIF_UCOM24
TP8722 <=LDASH/L UIF_UCOM28
TP8723 <=L/OTHERS UIF_UCOM29
TP8724 =>HP_PLUG UIF_UCOM30
R8750 3.3K
TP8725 <=EU_STB_SW UIF_UCOM37
TP8726 =>RAPID_DT_1 UIF_UCOM38
TP8727 =>RAPID_DT_3 UIF_UCOM39
TP8728 <=IN2DET_B UIF_UCOM40
V+3STB
TP8739
R8705 3.3K
R8721 47K
→ RXD_IF 50
52 SR_IN 52
53 LINK_IN 53
SR_EN_B 54
EX_A3 55
EX_A2 56
EX_A1 57
EX_A0 58
59 SR_DET_B 59
TEST1
TRG_ST
AD_ST
MR_KEY 63
R8762 47K
R8773 10K
R8733 10K
R8735 10K
GND
TP8705
R8707 100
R8725 100
R8723 100
R8726 100
R8724 100
R8761 100
R8764 100
R8708 100
R8709 100
R8710 0
R8711 0
R8712 0
R8713 100
P70/SCK3_2
P71/RXD_2
P72/TXD_2
P14/IRQ0
P15/IRQ1/TMIB1
P16/IRQ2
P17/IRQ3/TRGV
P33 P32 P31 P30
PB3/AN3 PB2/AN2 PB1/AN1 PB0/AN0
PB4/AN4 PB5/AN5 PB6/AN6 PB7/AN7
P23 P22/TXD P21/RXD P20/SCK3 P87 P86 P85 P67/FTIOD1
AVCC X2 X1 VCL RES TEST VSS
IC8702
HD64F3687FP
UIF_UCOM
V+3UIF
DCH1165- -T
C8716 10/16
C8702 0.1/50
R8746 100
C8703 0.1/50
B 5/8 PN2
GND
X8702 ASS1168- -T
C8706 CH 12P
X8701 ASS1172- -TBB
C8707 CH 12P
TP8707
R8751 4.7K
IC8705
24LC01B-TBB
A0 A1 A2 VSS VCC WP SCL SDA
B 5/8
STB_MT
TP8729
STB_MT
V+3STB
R8757 3.3K
Q8702
RN1303-TLB
R8714 0
<=ACTIVE 47
GND
UIF_UCOM[1:72]
B 1/8-5/8, 7/8, 8/8

B 6/8

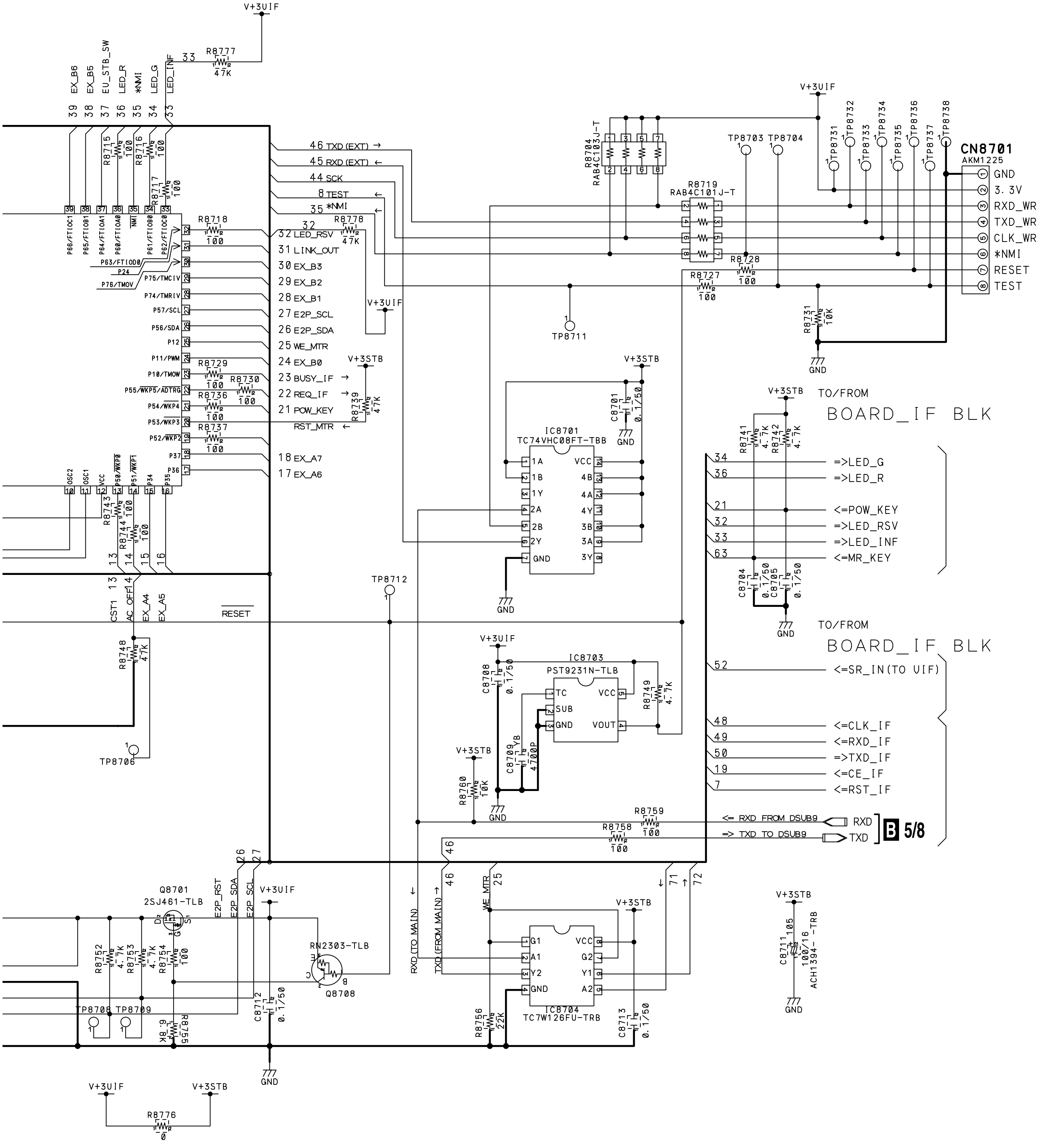

V+3UIF
R8777
47K
33
EX_B6
EX_B5
EU_STB_SW
LED_R
*NMI
LED_G
LED_INF
39 38 37 36 35 34 33
R8715 100
R8716 100
R8717 100
P66/FTIOC1
P65/FTIOB1
P64/FTIOA1
P60/FTIOA0
NMI
P61/FTIOB0
P62/FTIOC0
P63/FTIOD0
P24
P75/TMCIV
P76/TMOV
P74/TMRIV
P57/SCL
P56/SDA
P12
P11/PWM
P10/TMOW
P55/WKP5/ADTRG
P54/WKP4
P53/WKP3
P52/WKP2
P37
P36
OSC2
OSC1
VCC
P50/WKP0
P51/WKP1
P34
P35
R8718 100
R8778 47K
46 TXD (EXT) →
45 RXD (EXT) ←
44 SCK
8 TEST ←
35 *NMI ←
32 LED_RSV
31 LINK_OUT
30 EX_B3
29 EX_B2
28 EX_B1
27 E2P_SCL
26 E2P_SDA
25 WE_MTR
24 EX_B0
23 BUSY_IF →
22 REQ_IF →
21 POW_KEY
RST_MTR ←
18 EX_A7
17 EX_A6
R8729 100
R8730 100
R8736 100
R8737 100
R8739 47K
V+3STB
R8743 100
R8744 100
13 14 15 16
CST1
AC_OFF
EX_A4
EX_A5
RESET
R8748 47K
TP8706
V+3UIF
R8704 RAB4C103J-T
R8719 RAB4C101J-T
TP8703
TP8704
TP8731
TP8732
TP8733
TP8734
TP8735
TP8736
TP8737
TP8738
CN8701
AKM1225
① GND
② 3.3V
③ RXD_WR
④ TXD_WR
⑤ CLK_WR
⑥ *NMI
⑦ RESET
⑧ TEST
R8728 100
R8727 100
R8731 10K
GND
TP8711
C8701 0.1/50
IC8701
TC74VHC08FT-TBB
1A 1B 1Y 2A 2B 2Y GND
VCC 4B 4A 4Y 3B 3A 3Y
TP8712
TO/FROM
BOARD_IF BLK
R8741 4.7K
R8742 4.7K
34 =>LED_G
36 =>LED_R
21 <=POW_KEY
32 =>LED_RSV
33 =>LED_INF
63 <=MR_KEY
C8704 0.1/50
C8705 0.1/50
TO/FROM
BOARD_IF BLK
52 <=SR_IN(TO UIF)
48 <=CLK_IF
49 <=RXD_IF
50 =>TXD_IF
19 <=CE_IF
7 <=RST_IF
C8708 0.1/50
IC8703
PST9231N-TLB
TC SUB GND VCC VOUT
R8749 4.7K
C8709 4700P
R8760 10K
R8759 100
R8758 100
<= RXD FROM DSUB9
=> TXD TO DSUB9
RXD
TXD
B 5/8
26 27
46
E2P_RST
E2P_SDA
E2P_SCL
Q8701
2SJ461-TLB
RN2303-TLB
Q8708
R8752 4.7K
R8753 4.7K
R8754 100
R8755 6.8K
TP8708
TP8709
C8712 0.1/50
RXD (TO MAIN) ↓
TXD (FROM MAIN) →
WE_MTR
25
71 72
IC8704
TC7W126FU-TRB
G1 A1 Y2 GND VCC G2 Y1 A2
R8756 22K
C8713 0.1/50
C8711 10S 100/16 ACH1394-TRB
V+3UIF
V+3STB
R8776 0

3.22 AV BOARD ASSY (7/8)

B 7/8 AV BOARD ASSY (AWZ6813)

- **TELE TEXT BLOCK**

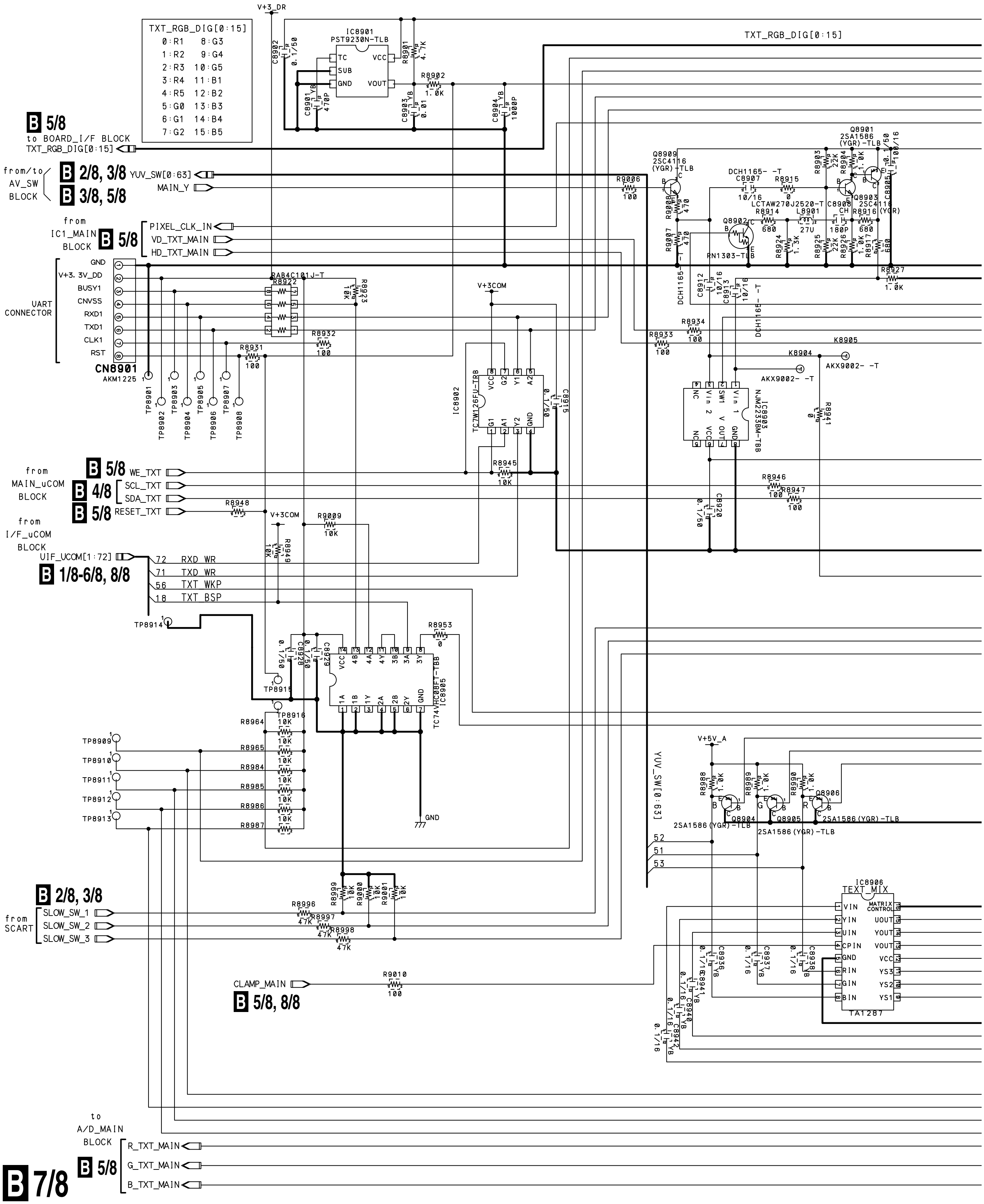
V+3_DR
TXT_RGB_DIG[0:15]
0:R1 8:G3
1:R2 9:G4
2:R3 10:G5
3:R4 11:B1
4:R5 12:B2
5:G0 13:B3
6:G1 14:B4
7:G2 15:B5
IC8901
PST9230N-TLB
TC
SUB
GND
VCC
VOUT
C8902 0.1/50
C8901 YB 470P
C8903 YB 0.01
C8904 YB 1000P
R8901 4.7K
R8902 1.0K
B 5/8
to BOARD_I/F BLOCK
TXT_RGB_DIG[0:15]
from/to AV_SW BLOCK
B 2/8, 3/8
B 3/8, 5/8
YUV_SW[0:63]
MAIN_Y
from IC1_MAIN BLOCK
B 5/8
PIXEL_CLK_IN
VD_TXT_MAIN
HD_TXT_MAIN
UART CONNECTOR
GND
V+3.3V_DD
BUSY1
CNVSS
RXD1
TXD1
CLK1
RST
CN8901
AKM1225
RAB4C101J-T
R8922
R8923 10K
R8931 100
R8932 100
TP8901
TP8902
TP8903
TP8904
TP8905
TP8906
TP8907
TP8908
V+3COM
IC8902
TC7W126FU-TRB
VCC
G2
Y1
A2
G1
A1
Y2
GND
C8915 0.1/50
R8945 10K
Q8909
2SC4116 (YGR)-TLB
R9006 100
R9008 470
R9007 470
DCH1165-T
C8907 10/16
R8915 0
Q8901
2SA1586 (YGR)-TLB
R8903 22K
R8904 1.0K
C8905 0.1/50
C8906 100/16
Q8903
2SC4116 (YGR)
LCTAW270J2520-T
R8914 680
L8901 27U
C8908 CH 180P
R8916 680
Q8902
RN1303-TLB
R8924 1.3K
R8925 22K
R8926 1.0K
R8917 680
R8927 1.0K
C8912 10/16
C8913 10/16
DCH1165-T
R8934 100
R8933 100
K8905
K8904
AKX9002-T
AKX9002-T
IC8903
NJM2233BM-TBB
NC
Vin 2
SW1
Vin 1
VCC
V OUT
GND
R8941 0
R8946 100
R8947 100
C8920 0.1/50
from MAIN_uCOM BLOCK
B 5/8
WE_TXT
B 4/8
SCL_TXT
SDA_TXT
B 5/8
RESET_TXT
R8948
V+3COM
R9009 10K
R8949 10K
from I/F_uCOM BLOCK
UIF_UCOM[1:72]
B 1/8-6/8, 8/8
72 RXD WR
71 TXD WR
56 TXT WKP
18 TXT BSP
TP8914
R8953 0
C8928 0.1/50
C8929 0.1/50
TP8915
TP8916
IC8905
TC74VHC08FT-TBB
VCC
4B
4A
4Y
3B
3A
3Y
1A
1B
1Y
2A
2B
2Y
GND
TP8909
TP8910
TP8911
TP8912
TP8913
R8964 10K
R8965 10K
R8984 10K
R8985 10K
R8986 10K
R8987 10K
GND
YUV_SW[0:63]
52
51
53
V+5V_A
R8988 1.0K
R8989 1.0K
R8990 1.0K
Q8904
Q8905
Q8906
2SA1586 (YGR)-TLB
2SA1586 (YGR)-TLB
2SA1586 (YGR)-TLB
R8999 10K
R9000 10K
R9001 10K
10K
B 2/8, 3/8
from SCART
SLOW_SW_1
SLOW_SW_2
SLOW_SW_3
R8996 47K
R8997 47K
R8998 47K
CLAMP_MAIN
R9010 100
B 5/8, 8/8
IC8906
TEXT_MIX
MATRIX CONTROL
VIN
YIN
UIN
CPIN
GND
RIN
GIN
BIN
UOUT
YOUT
VOUT
VCC
YS3
YS2
YS1
TA1287
C8936 0.1/16 YB
C8937 0.1/16 YB
C8938 0.1/16 YB
C8939 0.1/16 YB
C8940 0.1/16 YB
C8941 0.1/16 YB
C8942 0.1/16 YB
to A/D_MAIN BLOCK
B 5/8
R_TXT_MAIN
G_TXT_MAIN
B_TXT_MAIN
B 7/8

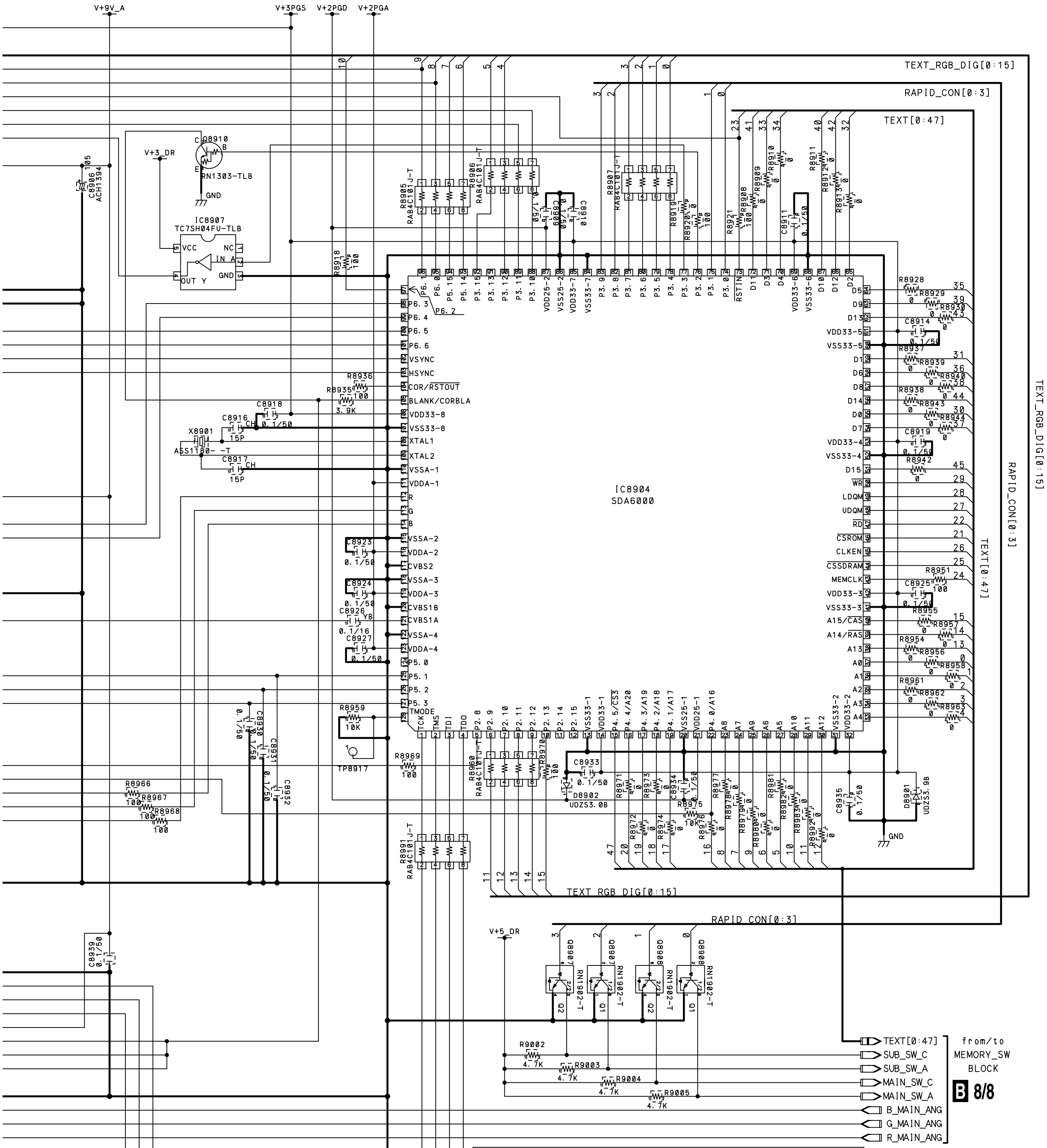
V+9V_A
V+3PGS
V+2PGD
V+2PGA
V+3_DR
Q8910
RN1303-TLB
GND
C8906
ACH1394
IC8907
TC7SH04FU-TLB
VCC
NC
IN A
GND
OUT Y
TEXT_RGB_DIG[0:15]
RAPID_CON[0:3]
TEXT[0:47]
R8905
RAB4C101J-T
R8906
RAB4C101J-T
R8907
RAB4C101J-T
C8909
C8910
C8911
0.1/50
R8908
R8909
R8910
R8911
R8912
R8913
R8918
100
R8919
R8920
R8921
IC8904
SDA6000
P6.1
P6.0
P5.15
P5.14
P3.15
P3.13
P3.12
P3.11
P3.10
VDD25-2
VSS25-2
VDD33-7
VSS33-7
P3.9
P3.8
P3.7
P3.6
P3.5
P3.4
P3.2
P3.3
P3.1
P3.0
RSTIN
D11
D3
D4
VDD33-6
VSS33-6
D12
D10
D2
P6.3
P6.2
P6.4
P6.5
P6.6
VSYNC
HSYNC
COR/RSTOUT
BLANK/CORBLA
VDD33-8
VSS33-8
XTAL1
XTAL2
VSSA-1
VDDA-1
R
G
B
VSSA-2
VDDA-2
CVBS2
VSSA-3
VDDA-3
CVBS1B
CVBS1A
VSSA-4
VDDA-4
P5.0
P5.1
P5.2
P5.3
TMODE
R8935
3.9K
R8936
C8918
C8916
15P
C8917
15P
X8901
ASS1160--T
C8923
C8924
C8926
0.1/16
C8927
R8959
10K
TP8917
R8969
C8930
C8931
C8932
R8966
R8967
R8968
D5
D9
D13
VDD33-5
VSS33-5
D1
D6
D8
D14
D0
D7
VDD33-4
VSS33-4
D15
WR
LDQM
UDQM
RD
CSROM
CLKEN
CSSDRAM
MEMCLK
VDD33-3
VSS33-3
A15/CAS
A14/RAS
A13
A0
A1
A2
A3
A4
R8928
R8929
R8930
C8914
R8937
R8939
R8940
R8938
R8943
R8944
C8919
R8942
C8925
R8951
R8955
R8957
R8954
R8956
R8958
R8961
R8962
R8963
TCK
TMS
TDI
TDO
P2.8
P2.9
P2.10
P2.11
P2.12
P2.13
P2.14
P2.15
VSS33-1
VDD33-1
P4.5/CS3
P4.4/A20
P4.3/A19
P4.2/A18
P4.1/A17
VSS25-1
VDD25-1
P4.0/A16
A8
A7
A9
A6
A5
A10
A11
A12
VSS33-2
VDD33-2
R8960
RAB4C101J-T
R8970
C8933
D8902
UDZS3.0B
R8971
R8972
R8973
R8974
C8934
R8975
10K
R8976
R8977
R8978
R8979
R8980
R8981
R8982
R8983
R8992
C8935
D8901
UDZS3.9B
R8901
RAB4C101J-T
C8939
V+5_DR
Q8907
Q8908
RN1902-T
Q1
Q2
R9002
4.7K
R9003
4.7K
R9004
4.7K
R9005
4.7K
TEXT[0:47]
SUB_SW_C
SUB_SW_A
MAIN_SW_C
MAIN_SW_A
B_MAIN_ANG
G_MAIN_ANG
R_MAIN_ANG
from/to
MEMORY_SW
BLOCK
B 8/8
GND

TEXT[0:47]

0:A0	6:A6	12:A12	18:A18	24:MEMCLK	30:D0	36:D6	42:D12
1:A1	7:A7	13:A13	19:A19	25:/CSSDRAM	31:D1	37:D7	43:D13
2:A2	8:A8	14:A14/RAS	20:A20	26:CLKEN	32:D2	38:D8	44:D14
3:A3	9:A9	15:A15/CAS	21:/CSROM	27:UDQM	33:D3	39:D9	45:D15
4:A4	10:A10	16:A16	22:/RD	28:LDQM	34:D4	40:D10	46:FLASH RY//BY
5:A5	11:A11	17:A17	23:/RSTIN	29:/WR	35:D5	41:D11	47:CS3

B 7/8

3.23 AV BOARD ASSY (8/8)

B 8/8 AV BOARD ASSY (AWZ6813)

● MEMORY_SW BLOCK

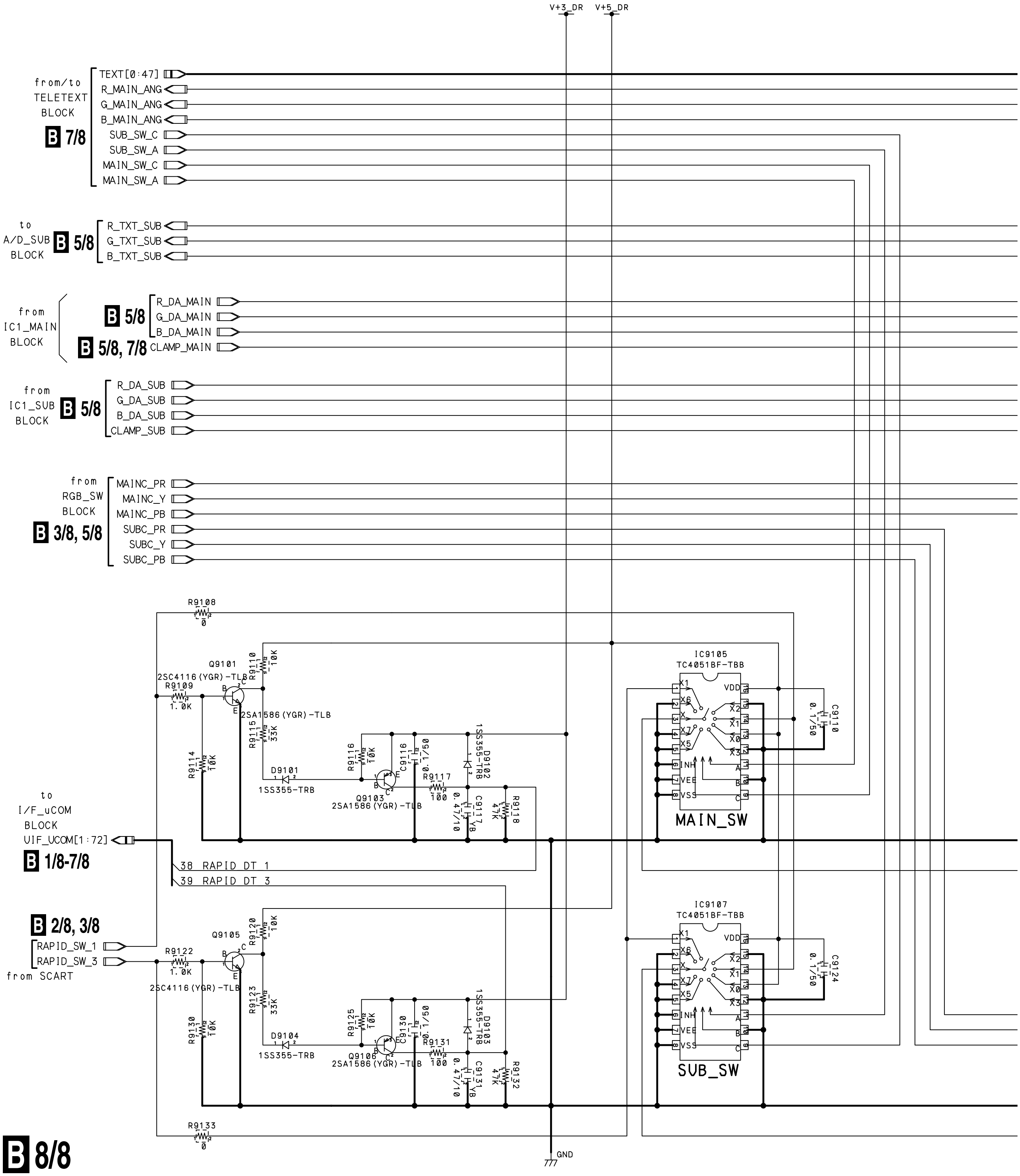
V+3_DR
V+5_DR
from/to TELETEXT BLOCK
B 7/8
TEXT[0:47]
R_MAIN_ANG
G_MAIN_ANG
B_MAIN_ANG
SUB_SW_C
SUB_SW_A
MAIN_SW_C
MAIN_SW_A
to A/D_SUB BLOCK
B 5/8
R_TXT_SUB
G_TXT_SUB
B_TXT_SUB
from IC1_MAIN BLOCK
B 5/8
R_DA_MAIN
G_DA_MAIN
B_DA_MAIN
B 5/8, 7/8
CLAMP_MAIN
from IC1_SUB BLOCK
B 5/8
R_DA_SUB
G_DA_SUB
B_DA_SUB
CLAMP_SUB
from RGB_SW BLOCK
B 3/8, 5/8
MAINC_PR
MAINC_Y
MAINC_PB
SUBC_PR
SUBC_Y
SUBC_PB
R9108
0
Q9101
2SC4116(YGR)-TLB
R9109
1.0K
R9110
10K
2SA1586(YGR)-TLB
R9115
33K
R9114
10K
D9101
1SS355-TRB
R9116
10K
C9116
0.1/50
Q9103
2SA1586(YGR)-TLB
R9117
100
D9102
1SS355-TRB
C9117
0.47/10
YB
R9118
47K
to I/F_uCOM BLOCK
UIF_UCOM[1:72]
B 1/8-7/8
38 RAPID DT 1
39 RAPID DT 3
B 2/8, 3/8
RAPID_SW_1
RAPID_SW_3
from SCART
R9122
1.0K
Q9105
2SC4116(YGR)-TLB
R9120
10K
R9123
33K
R9130
10K
D9104
1SS355-TRB
R9125
10K
C9130
0.1/50
Q9106
2SA1586(YGR)-TLB
R9131
100
D9103
1SS355-TRB
C9131
0.47/10
YB
R9132
47K
R9133
0
GND
IC9105
TC4051BF-TBB
X1
X6
X
X7
X5
INH
VEE
VSS
VDD
X2
X1
X0
X3
A
B
C
C9110
0.1/50
MAIN_SW
IC9107
TC4051BF-TBB
X1
X6
X
X7
X5
INH
VEE
VSS
VDD
X2
X1
X0
X3
A
B
C
C9124
0.1/50
SUB_SW

B 8/8

TEXT[0:47]

0:A0
1:A1
2:A2
3:A3
4:A4
5:A5
6:A6
7:A7
8:A8
9:A9

10:A10
11:A11
12:A12
13:A13
14:A14/RAS
15:A15/CAS
16:A16
17:A17
18:A18
19:A19

20:A20
21:/CSROM
22:/RD
23:/RSTIN
24:MEMCLK
25:/CSSDRAM
26:CLKEN
27:UDQM
28:LDQM
29:/WR

30:D0
31:D1
32:D2
33:D3
34:D4
35:D5
36:D6
37:D7
38:D8
39:D9

40:D10
41:D11
42:D12
43:D13
44:D14
45:D15
46:FLASH RY//BY
47:CS3

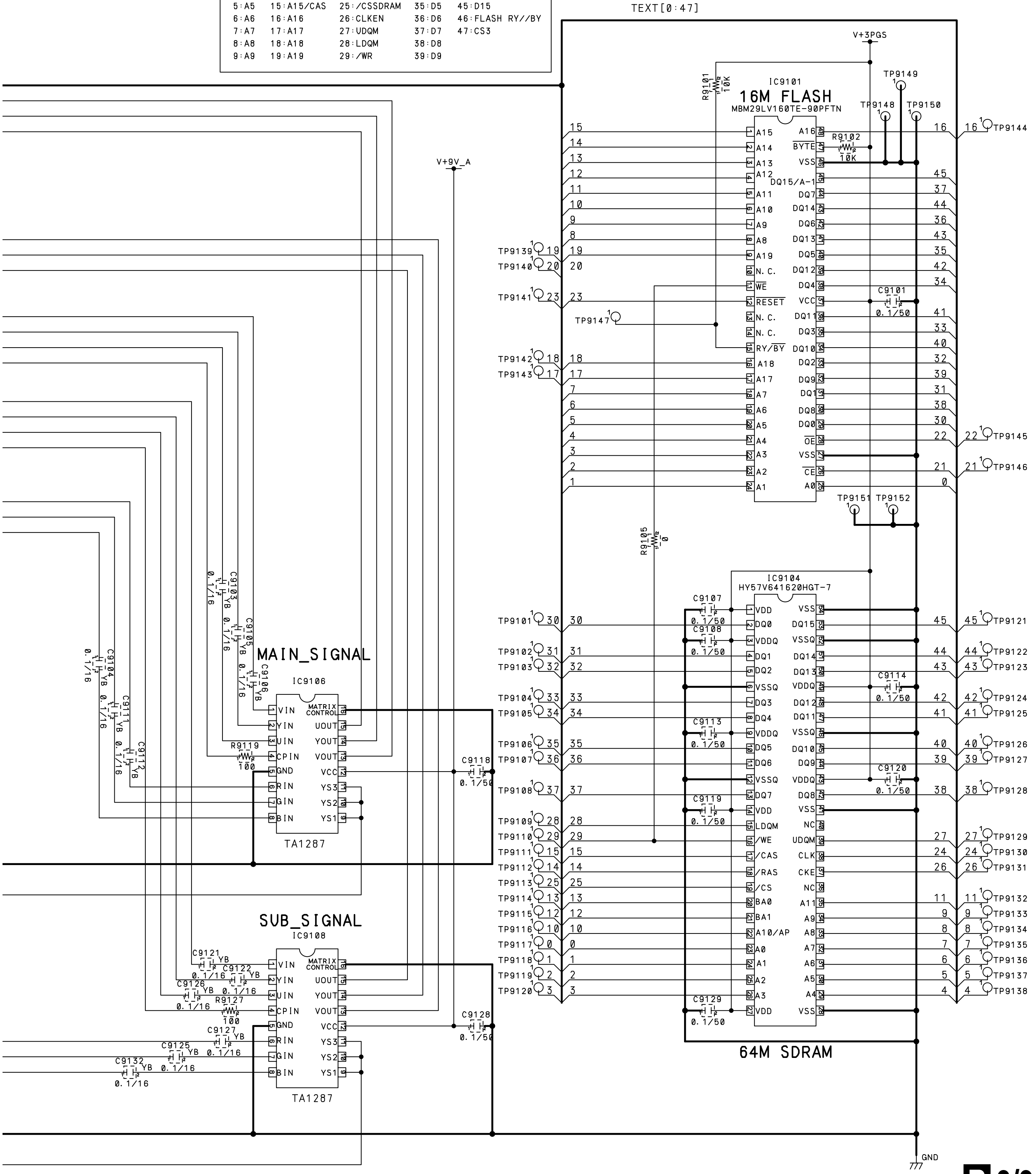

TEXT[0:47]
V+3PGS
R9101 10K
IC9101
16M FLASH
MBM29LV160TE-90PFTN
TP9148
TP9149
TP9150
R9102 10K
A15 A14 A13 A12 A11 A10 A9 A8 A19 N.C. WE RESET N.C. N.C. RY/BY A18 A17 A7 A6 A5 A4 A3 A2 A1
A16 BYTE VSS DQ15/A-1 DQ7 DQ14 DQ6 DQ13 DQ5 DQ12 DQ4 VCC DQ11 DQ3 DQ10 DQ2 DQ9 DQ1 DQ8 DQ0 OE VSS CE A0
C9101 0.1/50
TP9139 TP9140 TP9141 TP9147 TP9142 TP9143
TP9144 TP9145 TP9146
TP9151 TP9152
R9105 0
V+9V_A
IC9104
HY57V641620HGT-7
64M SDRAM
VDD DQ0 VDDQ DQ1 DQ2 VSSQ DQ3 DQ4 VDDQ DQ5 DQ6 VSSQ DQ7 VDD LDQM /WE /CAS /RAS /CS BA0 BA1 A10/AP A0 A1 A2 A3 VDD
VSS DQ15 VSSQ DQ14 DQ13 VDDQ DQ12 DQ11 VSSQ DQ10 DQ9 VDDQ DQ8 VSS NC UDQM CLK CKE NC A11 A9 A8 A7 A6 A5 A4 VSS
C9107 0.1/50
C9108 0.1/50
C9113 0.1/50
C9119 0.1/50
C9129 0.1/50
C9114 0.1/50
C9120 0.1/50
TP9101 TP9102 TP9103 TP9104 TP9105 TP9106 TP9107 TP9108 TP9109 TP9110 TP9111 TP9112 TP9113 TP9114 TP9115 TP9116 TP9117 TP9118 TP9119 TP9120
TP9121 TP9122 TP9123 TP9124 TP9125 TP9126 TP9127 TP9128 TP9129 TP9130 TP9131 TP9132 TP9133 TP9134 TP9135 TP9136 TP9137 TP9138
MAIN_SIGNAL
IC9106
TA1287
VIN YIN UIN CPIN GND RIN GIN BIN
MATRIX CONTROL UOUT YOUT VOUT VCC YS3 YS2 YS1
R9119 100
C9103 YB 0.1/16
C9105 YB 0.1/16
C9106 YB 0.1/16
C9104 YB 0.1/16
C9111 YB 0.1/16
C9112 YB
C9118 0.1/50
SUB_SIGNAL
IC9108
TA1287
C9121 YB 0.1/16
C9122 YB 0.1/16
C9126 YB 0.1/16
R9127 100
C9127 YB 0.1/16
C9125 YB 0.1/16
C9132 YB 0.1/16
C9128 0.1/50
GND

3.24 MDR ASSY

C MDR ASSY (AWZ6778)

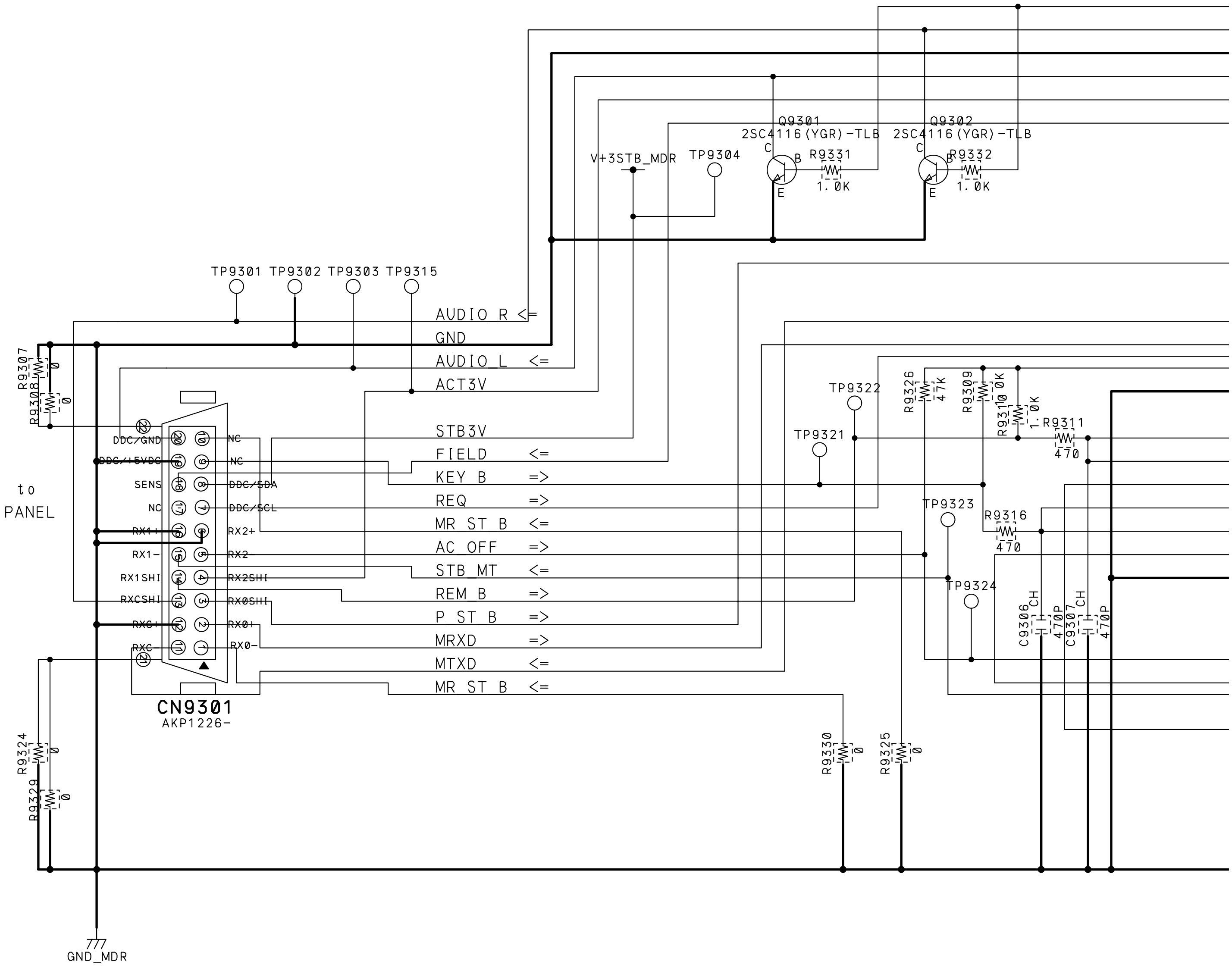
Q9301
2SC4116(YGR)-TLB
Q9302
2SC4116(YGR)-TLB
C
B
E
R9331
1.0K
R9332
1.0K
V+3STB_MDR
TP9304
TP9301
TP9302
TP9303
TP9315
AUDIO_R <=
GND
AUDIO_L <=
ACT3V
STB3V
FIELD <=
KEY_B =>
REQ =>
MR_ST_B <=
AC_OFF =>
STB_MT <=
REM_B =>
P_ST_B =>
MRXD =>
MTXD <=
MR_ST_B <=
R9307
0
R9308
0
to
PANEL
DDC/GND
DDC/+5VDC
SENS
NC
RX1+
RX1-
RX1SHI
RXCSHI
RXC+
RXC-
NC
NC
DDC/SDA
DDC/SCL
RX2+
RX2-
RX2SHI
RX0SHI
RX0+
RX0-
CN9301
AKP1226-
R9324
0
R9329
0
R9330
0
R9325
0
GND_MDR
TP9322
TP9321
R9326
47K
R9309
10K
R9310
1.0K
R9311
470
TP9323
R9316
470
TP9324
C9306
CH
470P
C9307
CH
470P

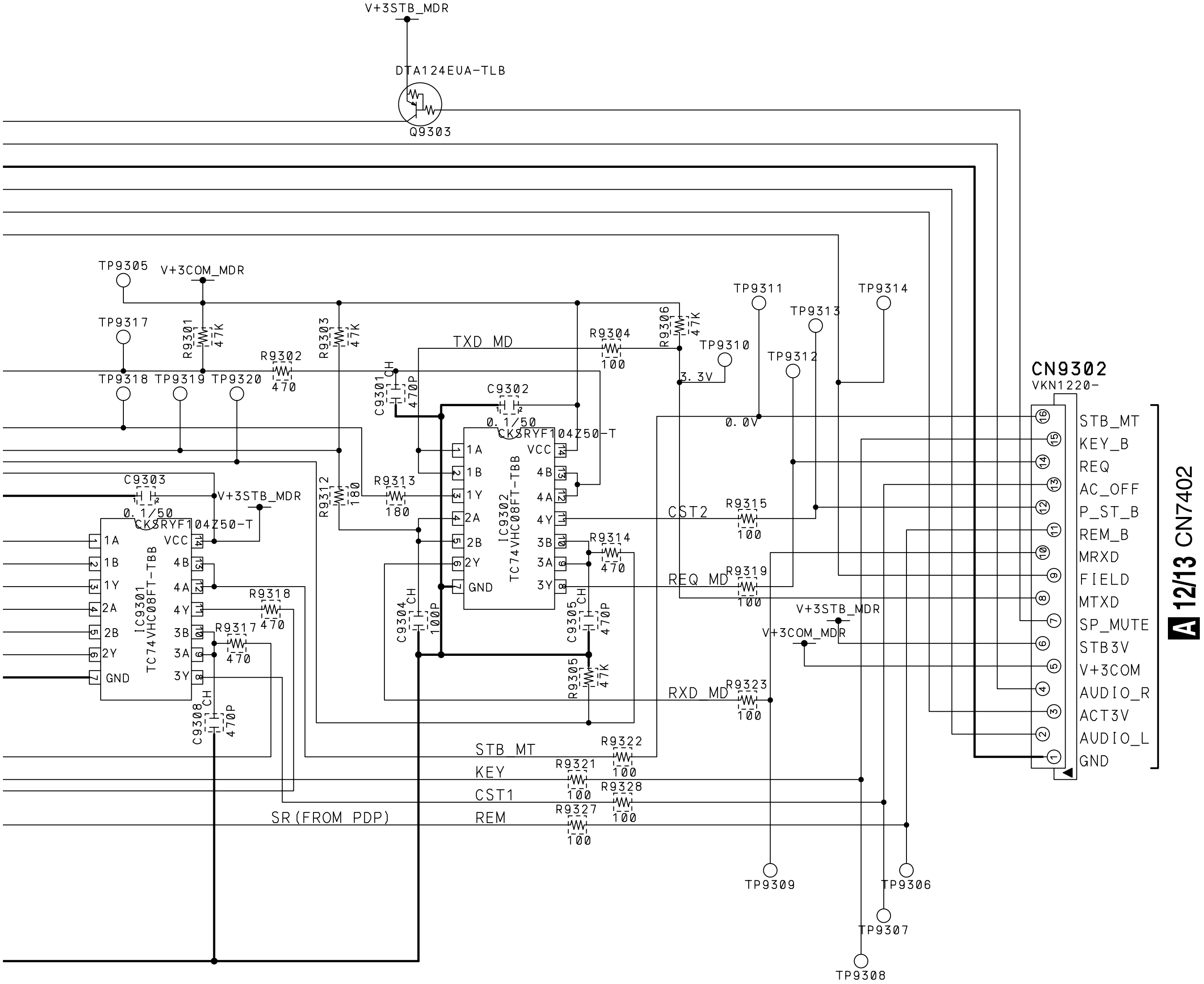

V+3STB_MDR
DTA124EUA-TLB
Q9303
TP9305
V+3COM_MDR
TP9317
R9301
47K
R9303
47K
R9302
470
TP9318
TP9319
TP9320
TXD MD
C9301
CH
470P
R9304
100
R9306
47K
TP9310
3.3V
TP9311
TP9313
TP9314
TP9312
0.0V
C9302
0.1/50
CKSRYF104Z50-T
C9303
0.1/50
CKSRYF104Z50-T
V+3STB_MDR
R9312
180
R9313
180
IC9302
TC74VHC08FT-TBB
IC9301
TC74VHC08FT-TBB
1A
1B
1Y
2A
2B
2Y
GND
VCC
4B
4A
4Y
3B
3A
3Y
CST2
R9315
100
R9314
470
R9318
470
R9317
470
REQ MD
R9319
100
V+3STB_MDR
V+3COM_MDR
C9304
CH
100P
C9305
CH
470P
R9305
47K
C9308
CH
470P
RXD MD
R9323
100
STB MT
R9322
100
KEY
R9321
100
CST1
R9328
100
SR(FROM PDP)
REM
R9327
100
TP9309
TP9306
TP9307
TP9308
CN9302
VKN1220-
16 STB_MT
15 KEY_B
14 REQ
13 AC_OFF
12 P_ST_B
11 REM_B
10 MRXD
9 FIELD
8 MTXD
7 SP_MUTE
6 STB3V
5 V+3COM
4 AUDIO_R
3 ACT3V
2 AUDIO_L
1 GND
A 12/13 CN7402

3.25 SR ASSY

D SR ASSY (AWZ6817)

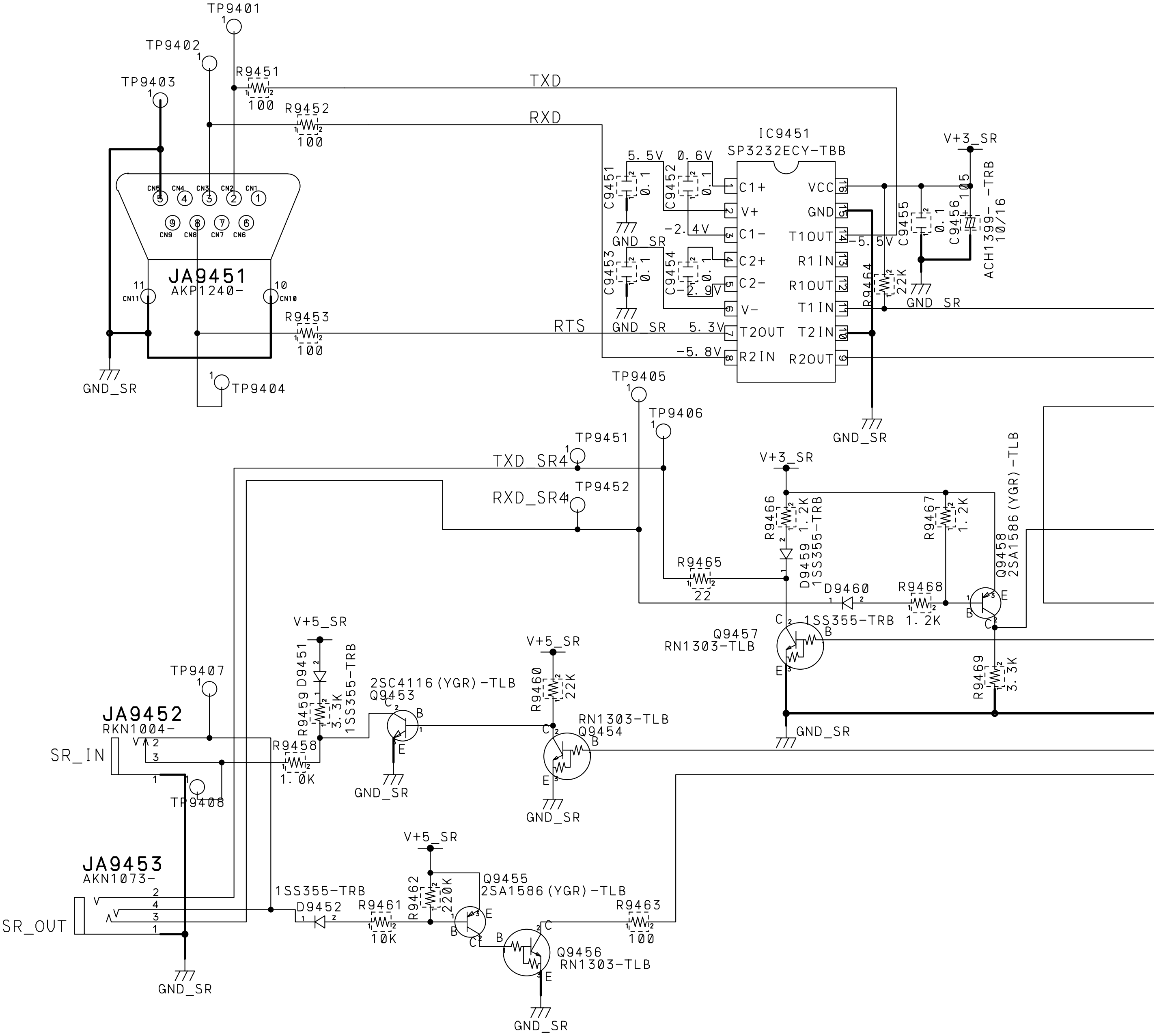
TP9401
TP9402
TP9403
R9451
100
TXD
R9452
100
RXD
IC9451
SP3232ECY-TBB
V+3_SR
5.5V
0.6V
C9451
0.1
C9452
0.1
GND_SR
-2.4V
C1+
V+
C1-
C2+
C2-
V-
T2OUT
R2IN
VCC
GND
T1OUT
R1IN
R1OUT
T1IN
T2IN
R2OUT
-5.5V
C9455
0.1
C9456 10
ACH1399- -TRB
10/16
C9453
0.1
C9454
0.1
-2.9V
R9464
22K
GND_SR
5.3V
-5.8V
CN5 CN4 CN3 CN2 CN1
CN9 CN8 CN7 CN6
JA9451
AKP1240-
CN11
CN10
R9453
100
RTS
GND_SR
TP9404
TP9405
TP9406
TP9451
TXD_SR4
TP9452
RXD_SR4
V+3_SR
R9466
1.2K
R9467
1.2K
Q9458
2SA1586(YGR)-TLB
D9459
1SS355-TRB
R9465
22
D9460
1SS355-TRB
R9468
1.2K
Q9457
RN1303-TLB
R9469
3.3K
GND_SR
V+5_SR
D9451
1SS355-TRB
R9459
3.3K
2SC4116(YGR)-TLB
Q9453
V+5_SR
R9460
22K
RN1303-TLB
Q9454
TP9407
JA9452
RKN1004-
SR_IN
R9458
1.0K
TP9408
GND_SR
GND_SR
V+5_SR
JA9453
AKN1073-
SR_OUT
1SS355-TRB
D9452
R9461
10K
R9462
220K
Q9455
2SA1586(YGR)-TLB
R9463
100
Q9456
RN1303-TLB
GND_SR
GND_SR

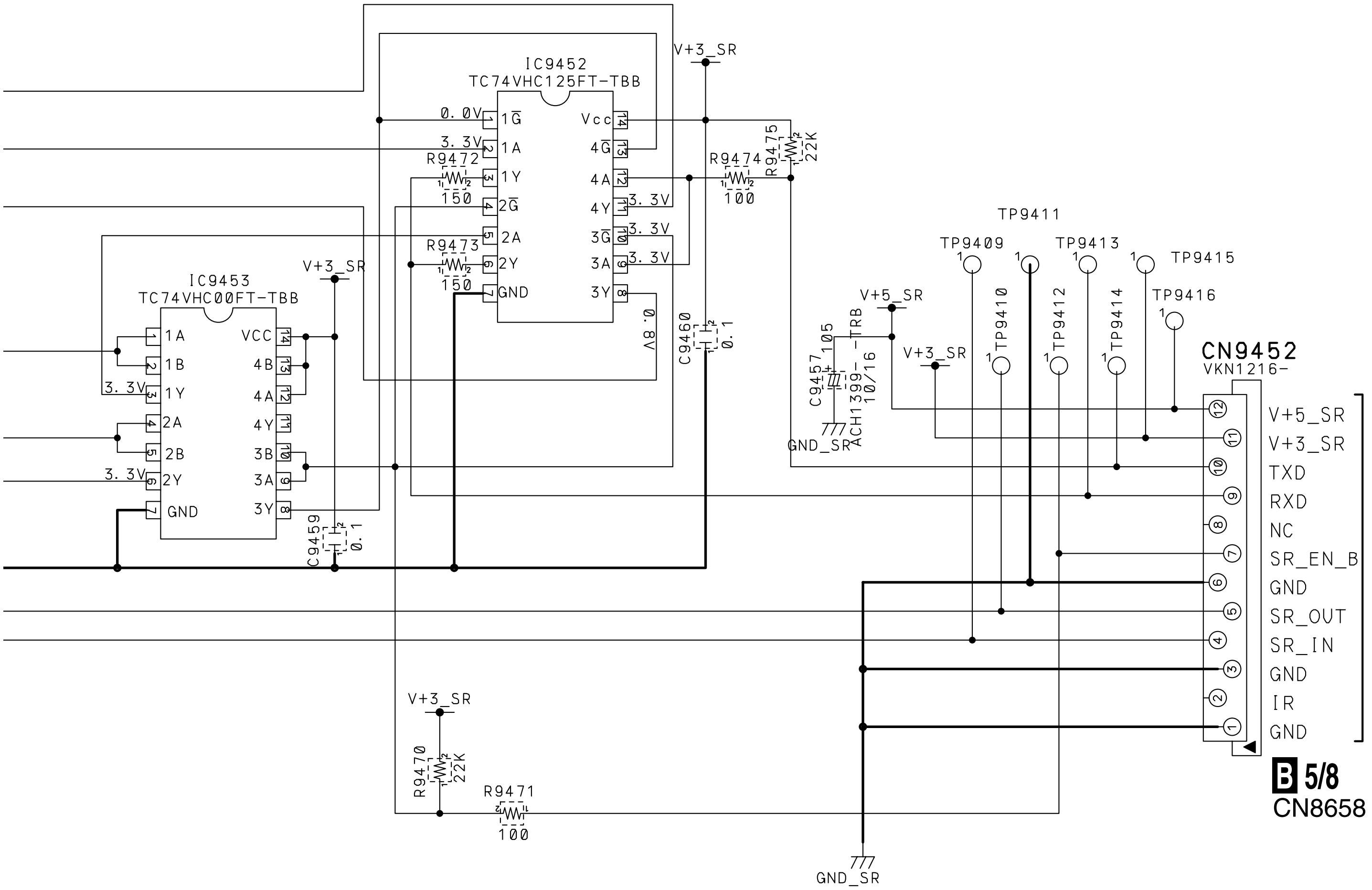
IC9452
TC74VHC125FT-TBB
0.0V
3.3V
1G
1A
1Y
2G
2A
2Y
GND
Vcc
4G
4A
4Y
3G
3A
3Y
3.3V
3.3V
0.8V
R9472
150
R9473
150
R9474
100
R9475
22K
V+3_SR
C9460
0.1
IC9453
TC74VHC00FT-TBB
1A
1B
1Y
2A
2B
2Y
GND
VCC
4B
4A
4Y
3B
3A
3Y
3.3V
3.3V
V+3_SR
C9459
0.1
V+5_SR
C9457
105
ACH1399-TRB
10/16
GND_SR
V+3_SR
TP9409
TP9410
TP9411
TP9412
TP9413
TP9414
TP9415
TP9416
CN9452
VKN1216-
V+5_SR
V+3_SR
TXD
RXD
NC
SR_EN_B
GND
SR_OUT
SR_IN
GND
IR
GND
B 5/8
CN8658
V+3_SR
R9470
22K
R9471
100
GND_SR

3.26 FRONT ASSY (1/2)

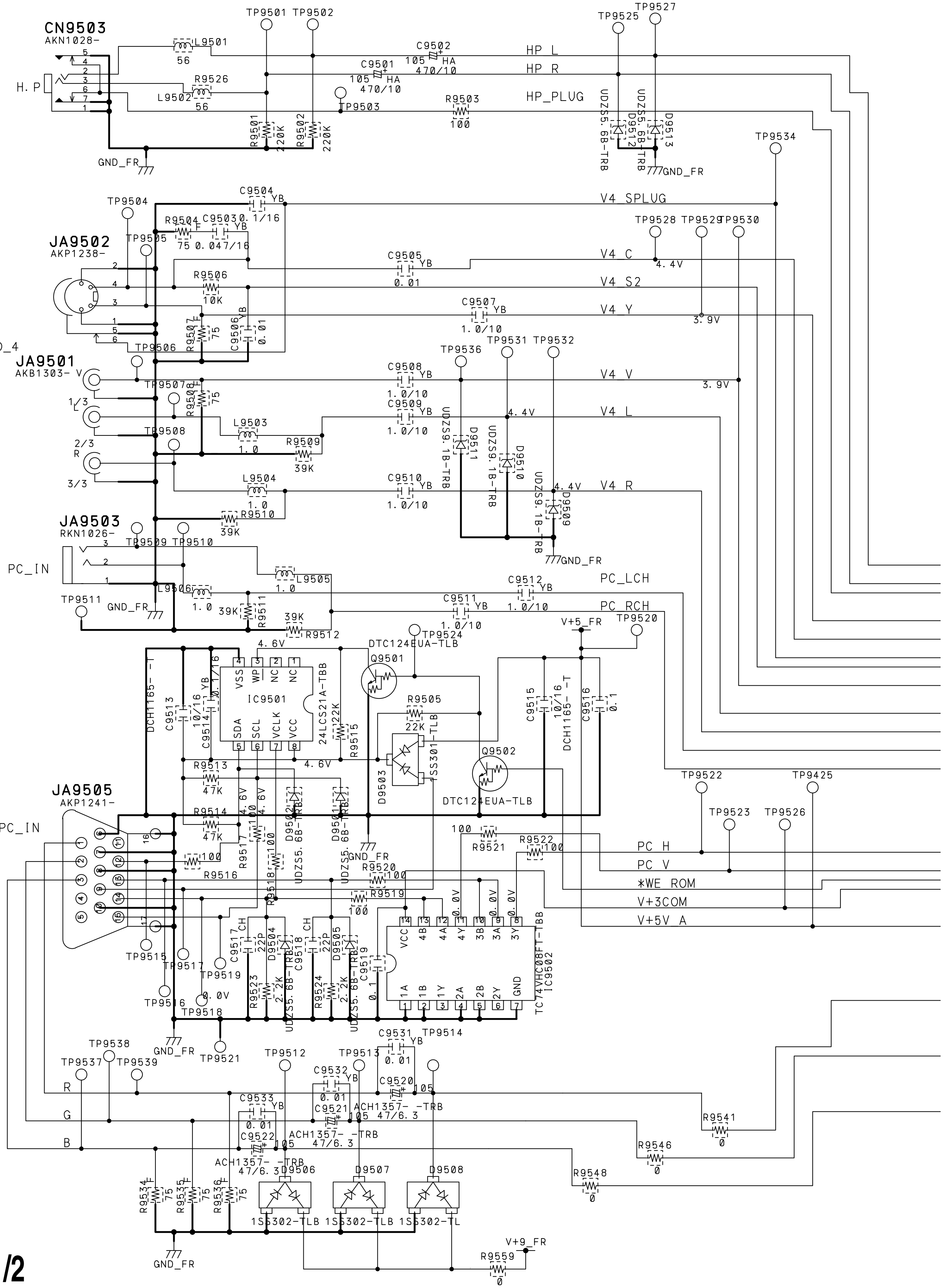
CN9503
AKN1028-
H.P
L9501
56
L9502
R9526
56
GND_FR
TP9501 TP9502
C9502
105 HA
470/10
C9501
105 HA
470/10
TP9503
R9503
100
R9501 220K
R9502 220K
HP_L
HP_R
HP_PLUG
TP9525 TP9527
UDZS5.6B-TRB D9512
UDZS5.6B-TRB D9513
GND_FR
TP9534
TP9504
C9504
YB
0.1/16
V4_SPLUG
R9504
C9503
YB
75 0.047/16
TP9505
JA9502
AKP1238-
TP9528 TP9529 TP9530
C9505
YB
0.01
V4_C
4.4V
R9506
10K
V4_S2
C9507
YB
1.0/10
V4_Y
3.9V
R9507
75
C9506
YB
0.01
VIDEO_4
TP9506
JA9501
AKB1303- V
1/3
2/3
R
3/3
TP9536 TP9531 TP9532
C9508
YB
1.0/10
V4_V
3.9V
TP9507
R9508
75
C9509
YB
1.0/10
V4_L
4.4V
L9503
1.0
R9509
39K
TP9508
UDZS9.1B-TRB D9511
UDZS9.1B-TRB D9510
UDZS9.1B-TRB D9509
L9504
1.0
C9510
YB
1.0/10
4.4V
V4_R
R9510
39K
JA9503
RKN1026-
TP9509 TP9510
GND_FR
PC_IN
L9505
1.0
C9512
YB
1.0/10
PC_LCH
L9506
1.0
39K
R9511
39K
C9511
YB
1.0/10
PC_RCH
TP9511
GND_FR
R9512
V+5_FR
TP9520
TP9524
4.6V
DTC124EUA-TLB
Q9501
DCH1165- -T
C9513
10/16
C9514
YB
0.1/16
VSS WP NC NC
IC9501
SDA SCL VCLK VCC
24LCS21A-TBB
122K
R9515
R9505
22K
1SS301-TLB
D9503
Q9502
DTC124EUA-TLB
C9515
10/16
DCH1165- -T
C9516
0.1
4.6V
R9513
47K
JA9505
AKP1241-
PC_IN
R9514
47K
4.6V
4.6V
R9517
100
R9518
100
D9502
UDZS5.6B-TRB
D9501
UDZS5.6B-TRB
GND_FR
100
R9521
R9522
100
TP9522 TP9425
TP9523 TP9526
PC_H
PC_V
*WE_ROM
V+3COM
V+5V_A
R9516
100
R9520
100
R9519
100
0.0V 0.0V 0.0V
VCC 4B 4A 4Y 3B 3A 3Y
TC74VHC08FT-TBB
IC9502
1A 1B 1Y 2A 2B 2Y GND
C9517
CH
22P
D9504
C9518
CH
22P
D9505
C9519
0.1
R9523
2.2K
R9524
2.2K
UDZS5.6B-TRB
UDZS5.6B-TRB
TP9515 TP9517 TP9519
0.0V
TP9516
TP9518
GND_FR
TP9521
TP9538
TP9537 TP9539
TP9512 TP9513
C9531
YB
0.01
TP9514
C9532
YB
0.01
C9520
105
C9521
105 47/6.3
ACH1357- -TRB
C9533
YB
0.01
C9522
105
ACH1357- -TRB
47/6.3
ACH1357- -TRB
47/6.3
R
G
B
R9541
0
R9546
0
R9548
0
D9506
D9507
D9508
1SS302-TLB
1SS302-TLB
1SS302-TL
R9534
75
R9535
75
R9536
75
GND_FR
V+9_FR
R9559
0

E 1/2

E 1/2 FRONT ASSY (AWZ6832)

● FRONT BLOCK

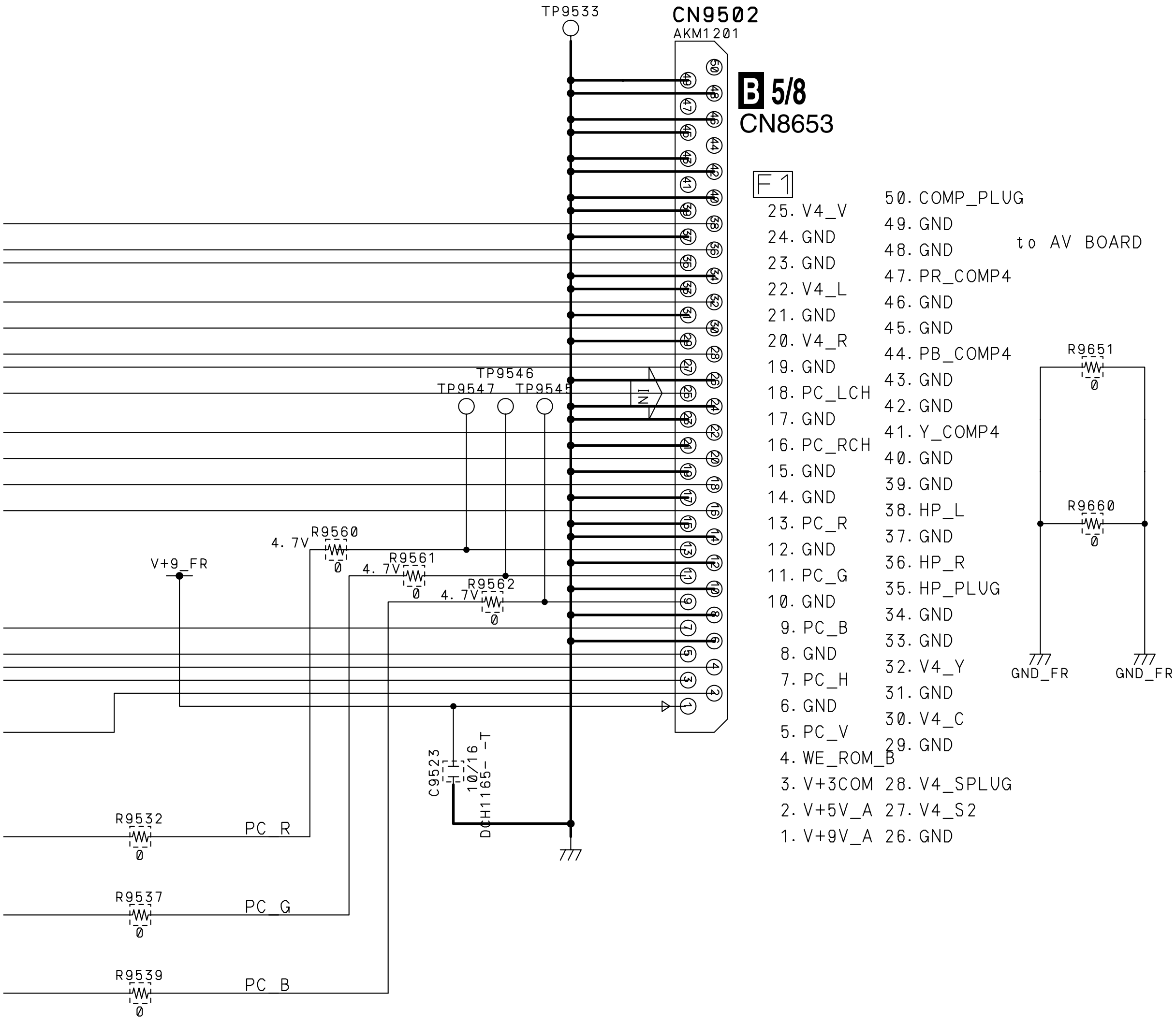
TP9533
CN9502
AKM1201
B 5/8
CN8653
F1
25. V4_V
24. GND
23. GND
22. V4_L
21. GND
20. V4_R
19. GND
18. PC_LCH
17. GND
16. PC_RCH
15. GND
14. GND
13. PC_R
12. GND
11. PC_G
10. GND
9. PC_B
8. GND
7. PC_H
6. GND
5. PC_V
4. WE_ROM_B
3. V+3COM
2. V+5V_A
1. V+9V_A
50. COMP_PLUG
49. GND
48. GND
47. PR_COMP4
46. GND
45. GND
44. PB_COMP4
43. GND
42. GND
41. Y_COMP4
40. GND
39. GND
38. HP_L
37. GND
36. HP_R
35. HP_PLUG
34. GND
33. GND
32. V4_Y
31. GND
30. V4_C
29. GND
28. V4_SPLUG
27. V4_S2
26. GND
to AV BOARD
IN
TP9546
TP9547
TP9548
R9651
0
R9660
0
GND_FR
GND_FR
4.7V
R9560
0
R9561
4.7V
0
R9562
4.7V
0
V+9_FR
C9523
10/16
DCH1165-T
R9532
0
PC_R
R9537
0
PC_G
R9539
0
PC_B

3.27 FRONT ASSY (2/2)

E 2/2 FRONT ASSY (AWZ6832)

● **SENSOR BLOCK**

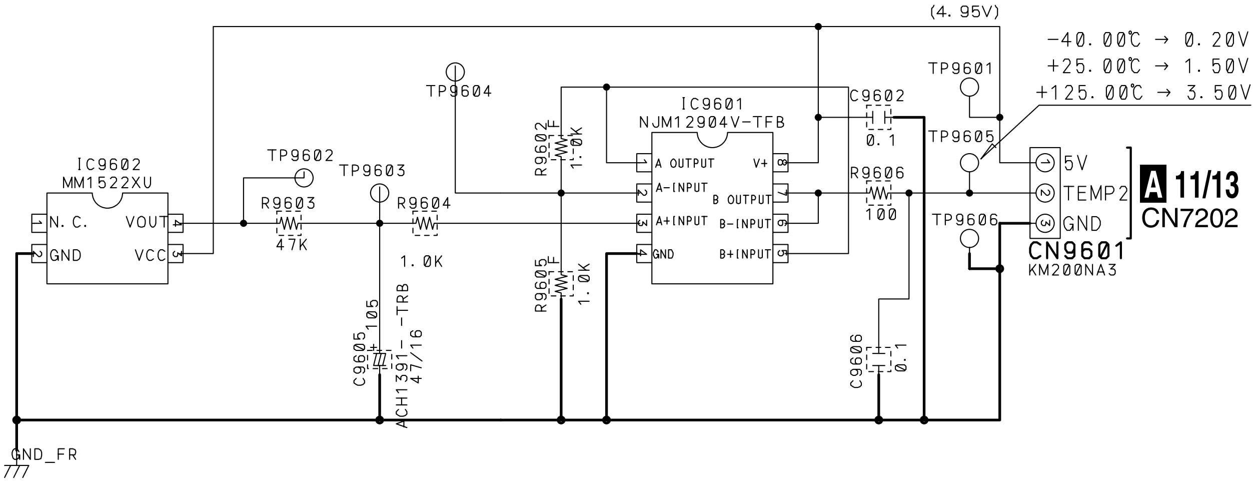
(4.95V)
-40.00℃ → 0.20V
+25.00℃ → 1.50V
+125.00℃ → 3.50V
TP9601
TP9604
IC9601
NJM12904V-TFB
C9602
0.1
TP9605
R9602
F
1.0K
IC9602
MM1522XU
TP9602
TP9603
R9603
47K
R9604
1.0K
1 N.C.
2 GND
VOUT 4
VCC 3
1 A OUTPUT
2 A-INPUT
3 A+INPUT
4 GND
V+ 8
B OUTPUT 7
B-INPUT 6
B+INPUT 5
R9606
100
TP9606
1 5V
2 TEMP2
3 GND
CN9601
KM200NA3
A 11/13
CN7202
R9605
F
1.0K
C9605
105
ACH1391--TRB
47/16
C9606
0.1
GND_FR

3.28 LED ASSY

F LED ASSY (AWZ6816)

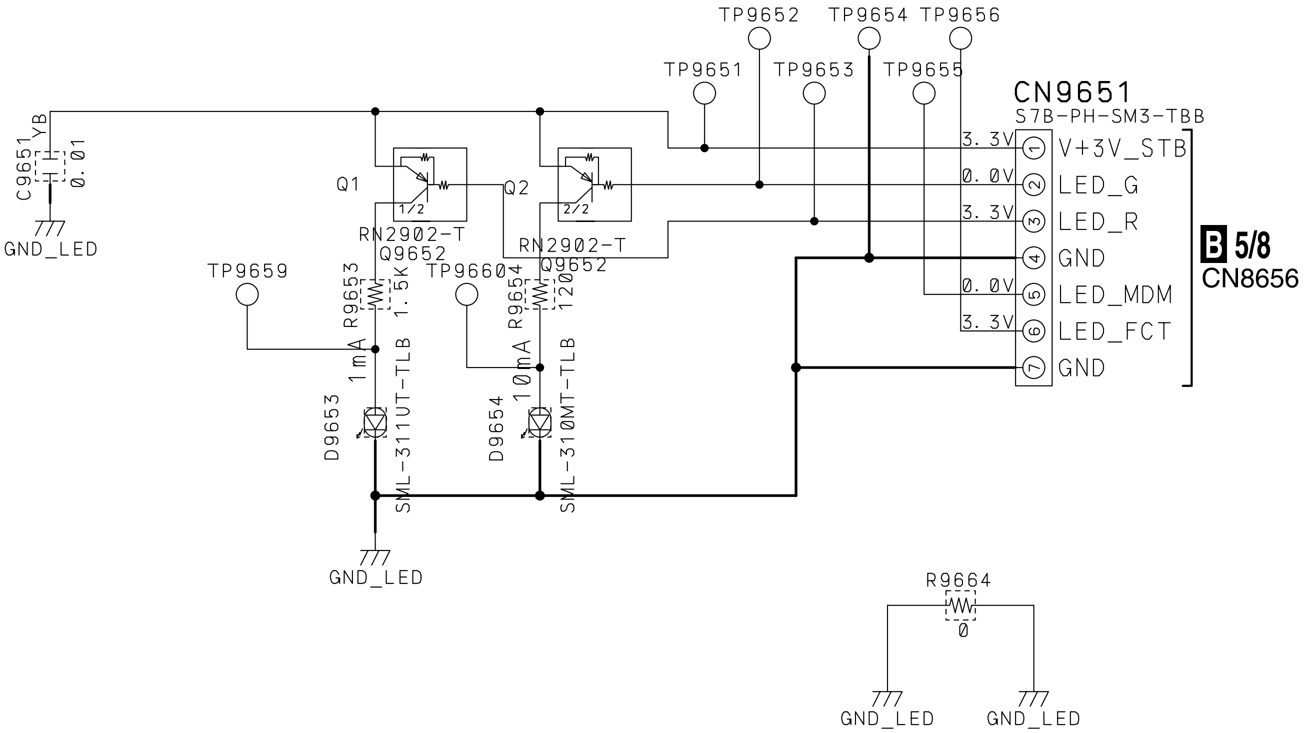
TP9652
TP9654
TP9656
TP9651
TP9653
TP9655
CN9651
S7B-PH-SM3-TBB
3.3V
① V+3V_STB
0.0V
② LED_G
3.3V
③ LED_R
④ GND
0.0V
⑤ LED_MDM
3.3V
⑥ LED_FCT
⑦ GND
B 5/8
CN8656
C9651
YB
0.01
GND_LED
Q1
1/2
Q2
2/2
RN2902-T
Q9652
RN2902-T
Q9652
TP9659
TP9660
R9653
1.5K
R9654
120
1mA
10mA
D9653
SML-311UT-TLB
D9654
SML-310MT-TLB
GND_LED
R9664
0
GND_LED
GND_LED

3.29 REG ASSY

G REG ASSY (AWZ6814)

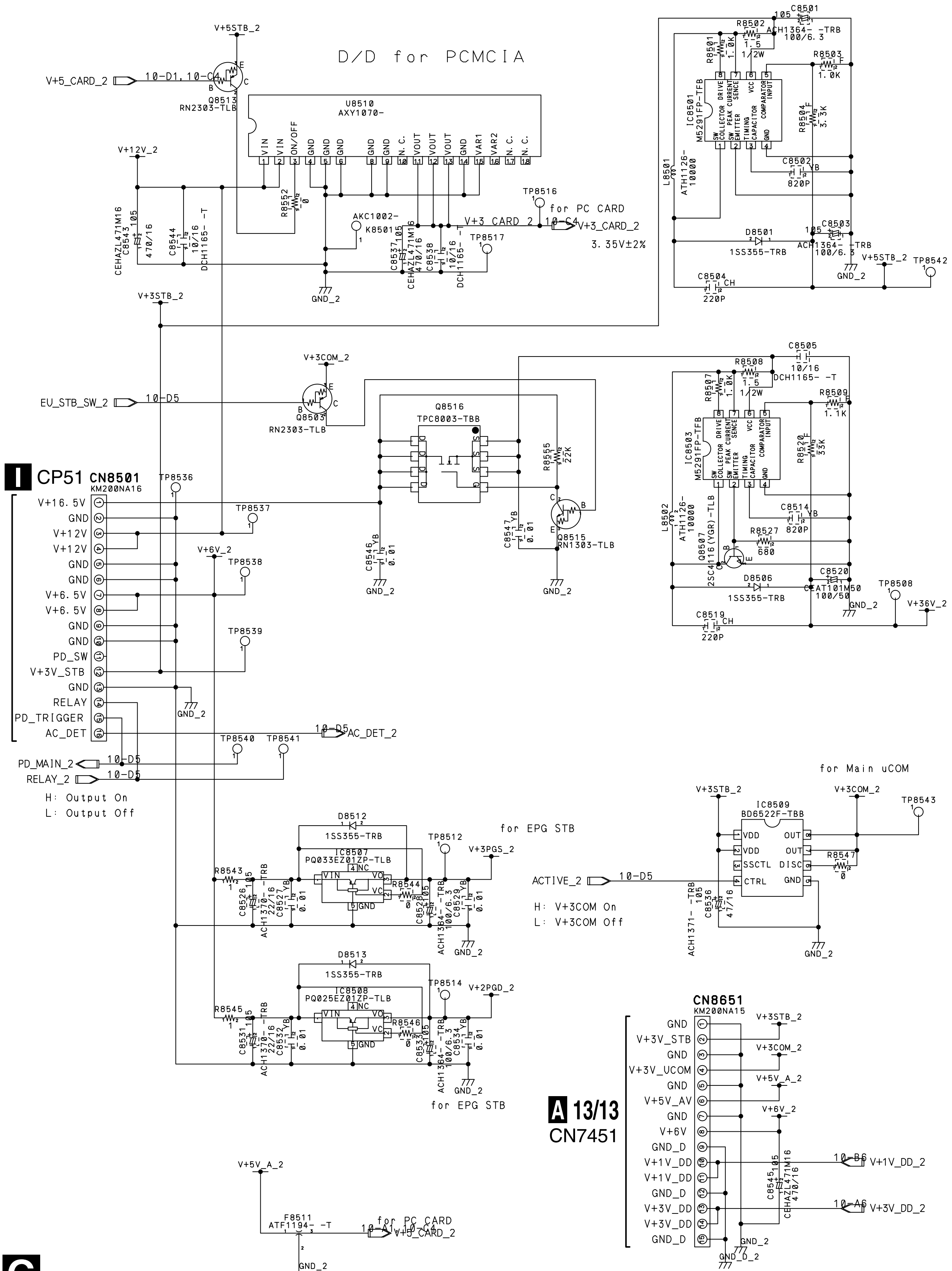
D/D for PCMCIA
V+5STB_2
V+5_CARD_2
10-D1,10-C4
Q8513
RN2303-TLB
U8510
AXY1070-
VIN
VIN
ON/OFF
GND
GND
GND
GND
GND
N.C.
VOUT
VOUT
VOUT
GND
VAR1
VAR2
N.C.
N.C.
V+12V_2
R8552
0
AKC1002-
K85015
TP8516
for PC CARD
V+3 CARD 2
10-C4
V+3_CARD_2
3.35V±2%
TP8517
CEHAZL471M16
C8543 105
470/16
C8544
10/16
DCH1165- -T
C8537 105
C8538
GND_2
V+3STB_2
C8501
105
R8502
ACH1364- -TRB
100/6.3
R8501
1.0K
1.5
1/2W
R8503
1.0K
IC8501
M5291FP-TFB
SW COLLECTOR
DRIVE
SW PEAK CURRENT SENCE
VCC
COMPARATOR INPUT
SW EMITTER
TIMING CAPACITOR
GND
R8504
3.3K
L8501
ATH1126-
10000
C8502
820P
D8501
1SS355-TRB
C8503
V+5STB_2
TP8542
C8504
220P
V+3COM_2
EU_STB_SW_2
10-D5
Q8503
RN2303-TLB
Q8516
TPC8003-TBB
R8555
22K
C8547
0.01
Q8515
RN1303-TLB
C8546
C8505
10/16
DCH1165- -T
R8508
1.5
1/2W
R8507
1.0K
R8509
1.1K
IC8503
M5291FP-TFB
R8520
33K
L8502
ATH1126-
10000
C8514
820P
R8527
680
Q8507
2SC4116(YGR)-TLB
D8506
1SS355-TRB
C8520
CEAT101M50
100/50
TP8508
V+36V_2
C8519
220P
CP51 CN8501
KM200NA16
TP8536
V+16.5V
GND
V+12V
V+12V
GND
GND
V+6.5V
V+6.5V
GND
GND
PD_SW
V+3V_STB
GND
RELAY
PD_TRIGGER
AC_DET
TP8537
V+6V_2
TP8538
TP8539
10-D5
AC_DET_2
TP8540
TP8541
PD_MAIN_2
10-D5
RELAY_2
10-D5
H: Output On
L: Output Off
for Main uCOM
V+3STB_2
V+3COM_2
IC8509
BD6522F-TBB
TP8543
VDD
VDD
SSCTL
CTRL
OUT
OUT
DISC
GND
R8547
0
ACTIVE_2
10-D5
H: V+3COM On
L: V+3COM Off
ACH1371- -TRB
105
C8536
47/16
D8512
1SS355-TRB
IC8507
PQ033EZ01ZP-TLB
NC
VIN
VO
VC
GND
TP8512
for EPG STB
V+3PGS_2
R8543
1
R8544
0
C8526
ACH1370- -TRB
22/16
C8527
0.01
C8528
ACH1364- -TRB
100/6.3
C8529
0.01
D8513
1SS355-TRB
IC8508
PQ025EZ01ZP-TLB
TP8514
V+2PGD_2
R8545
R8546
C8531
C8532
C8533
C8534
for EPG STB
CN8651
KM200NA15
GND
V+3V_STB
GND
V+3V_UCOM
GND
V+5V_AV
GND
V+6V
GND_D
V+1V_DD
V+1V_DD
GND_D
V+3V_DD
V+3V_DD
GND_D
V+3STB_2
V+3COM_2
V+5V_A_2
V+6V_2
C8545 105
CEHAZL471M16
470/16
10-B6
V+1V_DD_2
10-A6
V+3V_DD_2
GND_2
GND_D_2
A 13/13
CN7451
V+5V_A_2
F8511
ATF1194- -T
for PC CARD
10-A1,10-C4
V+5_CARD_2
GND_2

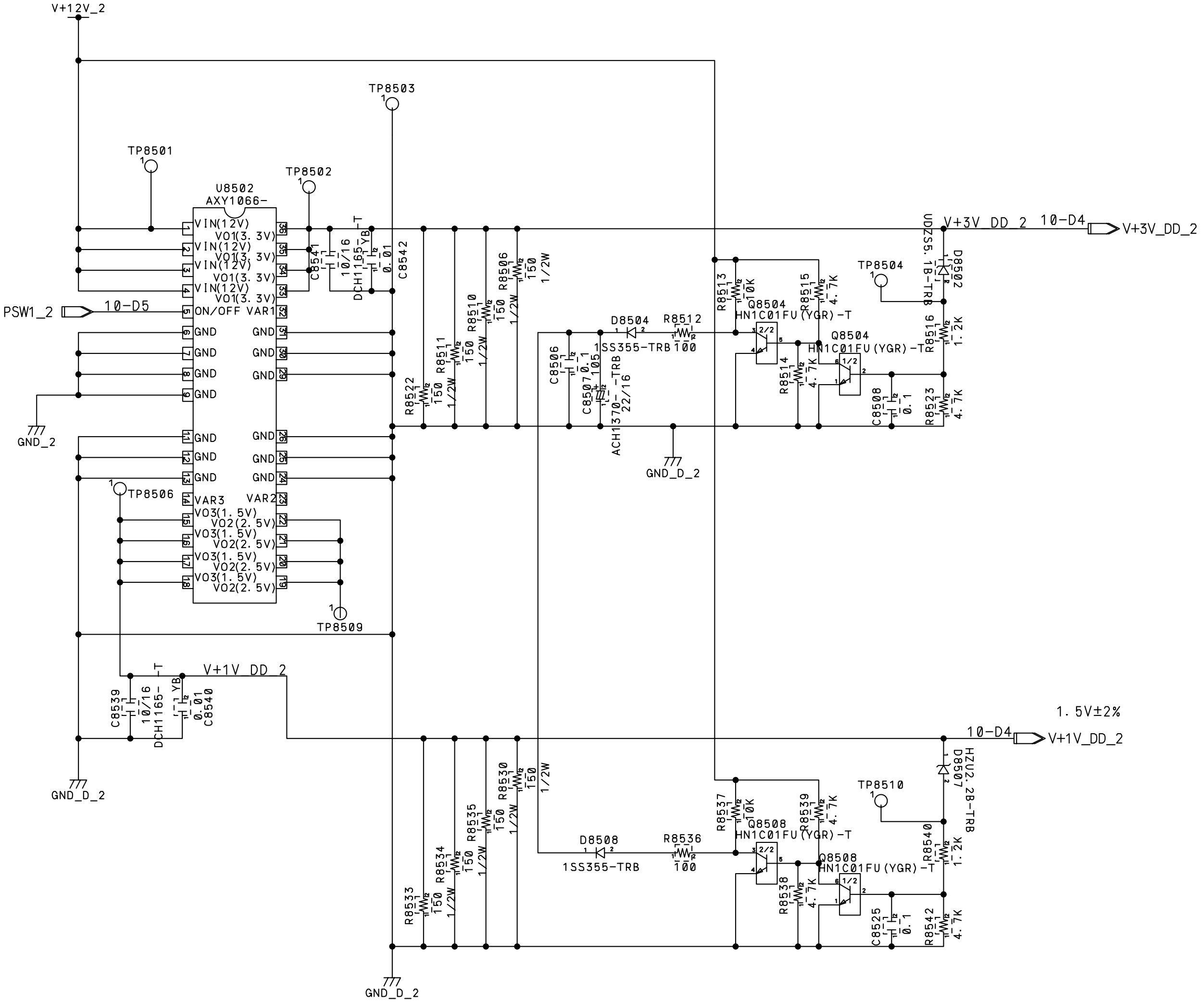
V+12V_2
TP8503
TP8501
TP8502
U8502
AXY1066-
VIN(12V)
VO1(3.3V)
ON/OFF VAR1
GND
VAR3
VAR2
VO3(1.5V)
VO2(2.5V)
PSW1_2
10-D5
GND_2
TP8506
TP8509
C8541
10/16
DCH1165-T
YB
0.01
C8542
R8522
R8511
150
1/2W
R8510
R8506
D8504
1SS355-TRB
R8512
100
C8506
C8507
0.1
105
ACH1370-TRB
22/16
GND_D_2
R8513
10K
R8515
4.7K
Q8504
HN1C01FU(YGR)-T
R8514
C8508
R8523
R8516
1.2K
TP8504
D8502
UDZS5.1B-TRB
V+3V_DD_2
10-D4
V+3V_DD_2
V+1V_DD_2
C8539
C8540
1.5V±2%
V+1V_DD_2
TP8510
D8507
HZU2.2B-TRB
R8537
R8539
Q8508
D8508
R8536
R8538
C8525
R8540
R8542
R8533
R8534
R8535
R8530
GND_D_2

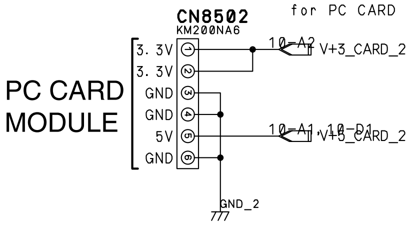
CN8502
KM200NA6
for PC CARD
PC CARD
MODULE
3.3V
3.3V
GND
GND
5V
GND
10-A2
V+3_CARD_2
10-A1 10-D1
V+5_CARD_2
GND_2

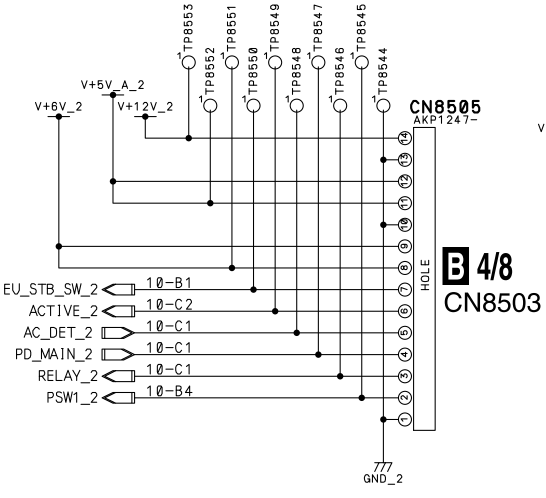
TP8553
TP8552
TP8551
TP8550
TP8549
TP8548
TP8547
TP8546
TP8545
TP8544
V+5V_A_2
V+6V_2
V+12V_2
CN8505
AKP1247-
HOLE
B 4/8
CN8503
EU_STB_SW_2
ACTIVE_2
AC_DET_2
PD_MAIN_2
RELAY_2
PSW1_2
10-B1
10-C2
10-C1
10-C1
10-C1
10-B4
GND_2

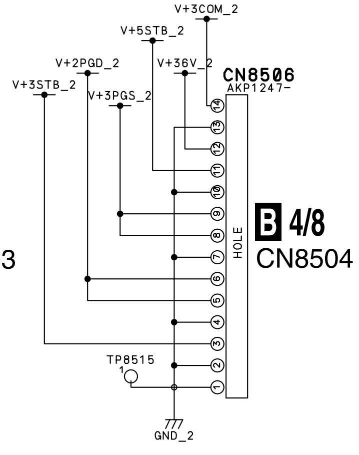
V+3COM_2
V+5STB_2
V+2PGD_2
V+36V_2
V+3STB_2
V+3PGS_2
CN8506
AKP1247-
HOLE
B 4/8
CN8504
TP8515
GND_2

3.30 AC SW ASSY and POWER SUPPLY UNIT

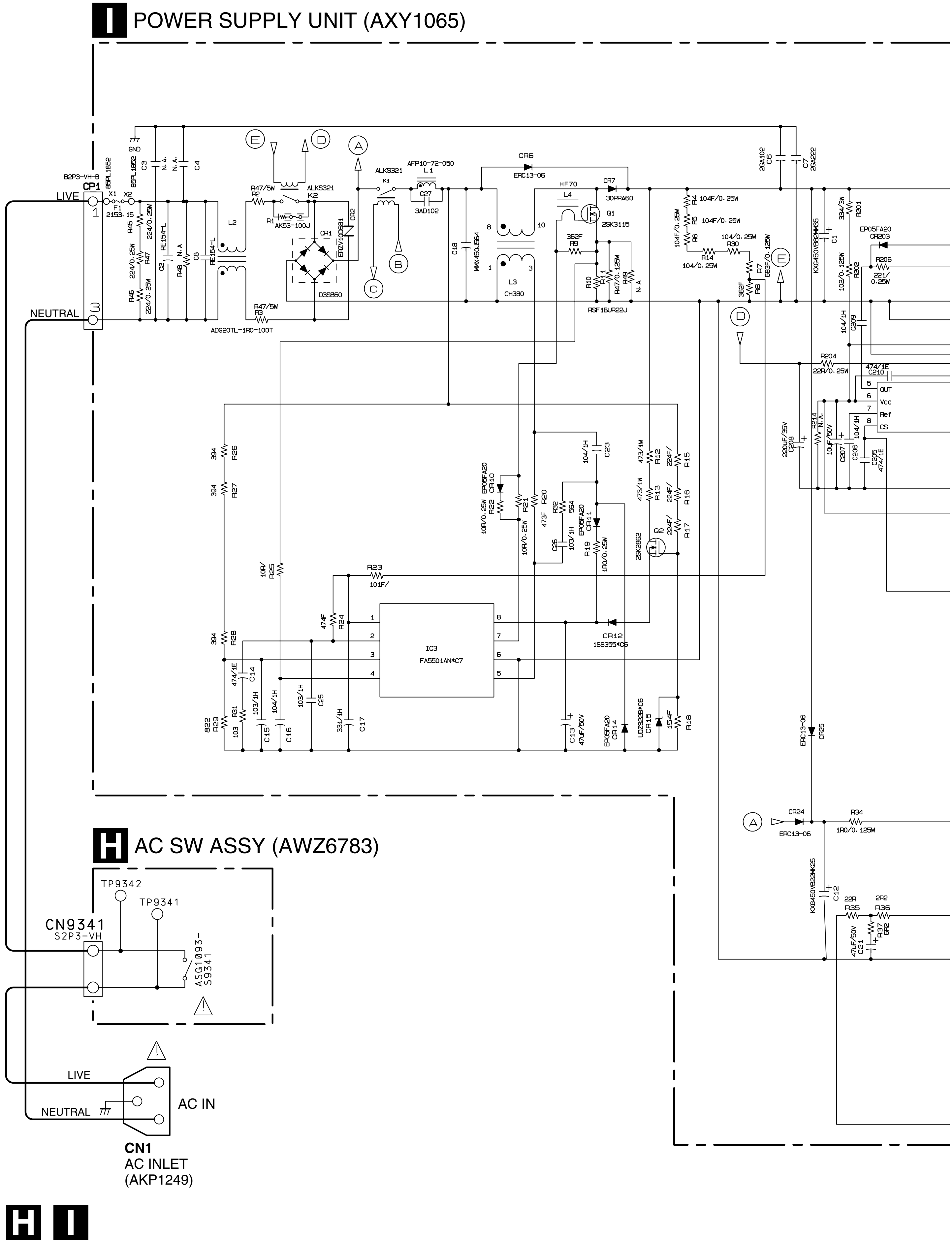
I POWER SUPPLY UNIT (AXY1065)
H AC SW ASSY (AWZ6783)
B2P3-VH-B
CP1
LIVE
NEUTRAL
GND
X1
X2
F1
2153.15
85PL1852
R45 224/0.25W
R47 224/0.25W
R46 224/0.25W
C3 N.A.
C4 N.A.
C2 RE154-L
R48 N.A
C8 RE154-L
L2
ADG20TL-1R0-100T
R47/5W R2
R47/5W R3
R1 AK53-100J
ALKS321 K2
ALKS321 K1
CR1 D3SB60
CR2 ERZV10D681
AFP10-72-050 L1
C27 3AD102
C18 MMX450J564
CR6 ERC13-06
HF70 L4
CR7 30PRA60
Q1 2SK3115
L3 CH380
362F R9
R10
R11 R47/0.125W
R49 N.A
RSF1BUR22J
2GA102 C6
C7 2GA222
R4 104F/0.25W
R5 104F/0.25W
R6 104F/0.25W
R14 104/0.25W
R30 104/0.25W
R7 683F/0.125W
R8 362F
C1 KXG450VB82MM35
R201 334/3W
R202 102/0.125W
EP05FA20 CR203
R206 221/0.25W
C209 104/1H
R204 22R/0.25W
C210 474/1E
OUT
Vcc
Ref
CS
R214 N.A.
C208 220uF/35V
C207 10uF/50V
C206 104/1H
C205 474/1E
R26 394
R27 394
R28 394
R29 822
R25 10R/
R23 101F/
R24 474F
IC3 FA5501AN*C7
C14 474/1E
R31 103
C15 103/1H
C16 104/1H
C25 103/1H
C17 331/1H
C23 104/1H
CR10 EP05FA20
R22 10R/0.25W
R21 10R/0.25W
R20 473F
R32 564
C26 103/1H
CR11 EP05FA20
R19 1R0/0.25W
R12 473/1W
R13 473/1W
Q2 2SK2862
R15 224F/
R16 224F/
R17 224F/
CR12 1SS355*C6
C13 47uF/50V
CR14 EP05FA20
CR15 UDZS2B*C6
154F
R18
CR25 ERC13-06
CR24 ERC13-06
R34 1R0/0.125W
C12 KXG450VB22MK25
R35 22R
R36 2R2
R37 6R2
C21 47uF/50V
TP9342
TP9341
CN9341 S2P3-VH
ASG1093-S9341
⚠
LIVE
NEUTRAL
AC IN
CN1
AC INLET
(AKP1249)
H I

A

B

C

D

E

F

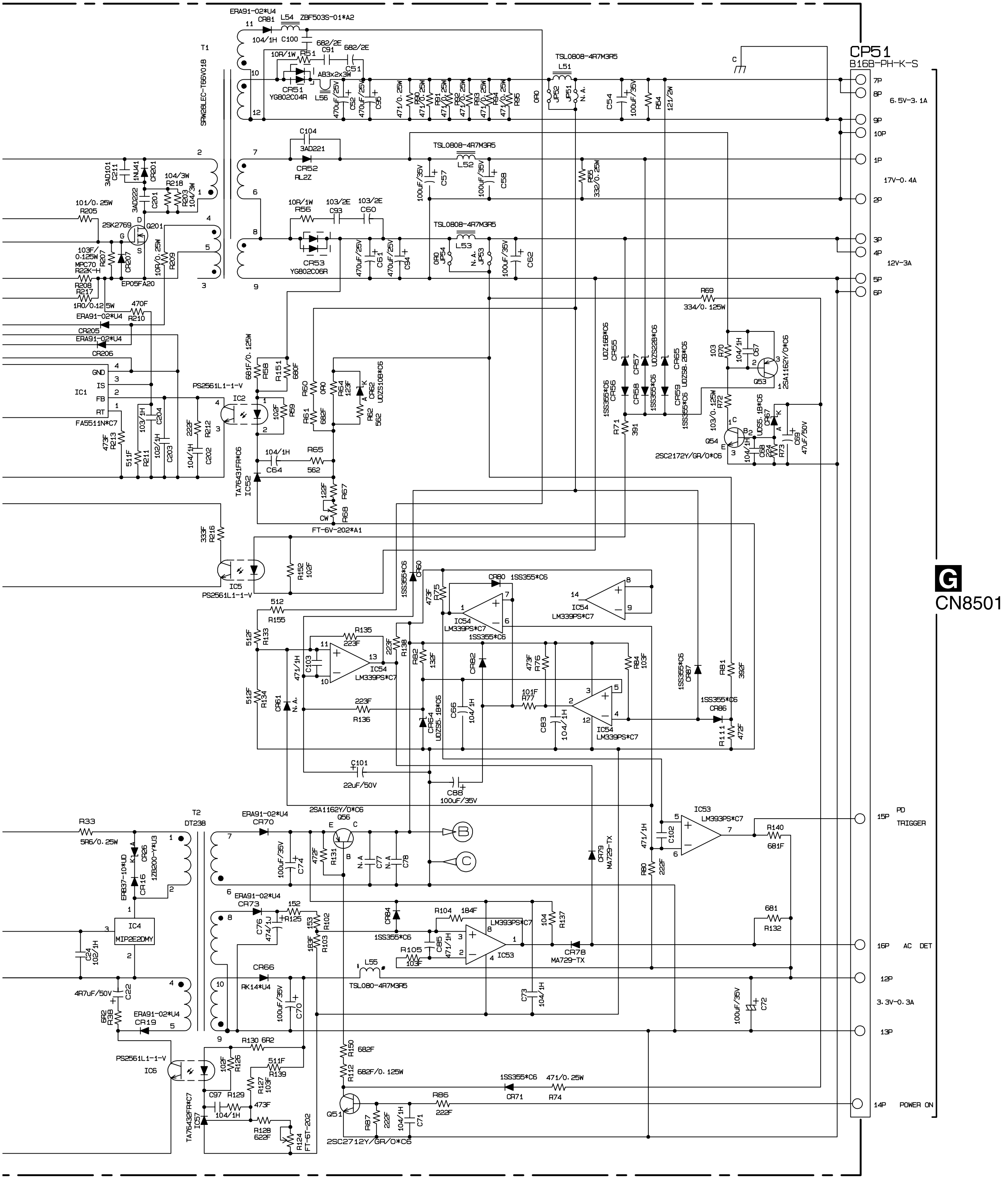

CP51
B16B-PH-K-S
G
CN8501
T1
SRW28LEC-T66V018
ERA91-02*U4
CR81
L54 ZBF503S-01*A2
104/1H C100
682/2E C91
682/2E C51
10R/1W R51
AB3x2x3W
CR51
YG802C04R
L56
470uF/25V C52
470uF/25V C95
471/0.25W R90
471/0.25W R91
471/0.25W R92
471/0.25W R93
471/0.25W R94
471/0.25W R95
0R0 JP52
JP51 N.A.
TSL0808-4R7M3R5
L51
100uF/35V C54
R54
121/2W
C
7P
8P
6.5V-3.1A
9P
10P
C104
3AD221
CR52
RL2Z
TSL0808-4R7M3R5
L52
100uF/35V C57
100uF/35V C58
R55 332/0.25W
1P
17V-0.4A
2P
10R/1W R56
103/2E C93
103/2E C60
CR53
YG802C06R
470uF/25V C61
470uF/25V C94
0R0 JP54
TSL0808-4R7M3R5
L53
N.A. JP53
100uF/35V C62
3P
4P
12V-3A
5P
6P
R69
334/0.125W
3AD101 C211
1NU41 CR201
104/3W R218
104/3W R203
3AD222 C201
101/0.25W R205
2SK2769 Q201
D G S
103F/0.125W R207
MPC70 CR207
10R/0.25W R209
R22K-H R208
R217
1R0/0.125W
EP05FA20
470F R210
ERA91-02*U4
CR205
ERA91-02*U4
CR206
GND IS FB RT
IC1
FA5511N*C7
473F R213
511F R211
103/1H C204
102/1H C203
222F R212
104/1H C202
PS2561L1-1-V
IC2
681F/0.125W R58
680F R151
102F R59
R60 0R0
R64 123F
CR62 UDZS10B*C6
R61 682F
R62 562
104/1H C64
R65 562
TA76431FR*C6
IC52
122F R67
CW R68
FT-6V-202*A1
UDZS16B*C6 CR55
1SS355*C6 CR56
UDZS22B*C6 CR57
1SS355*C6 CR58
UDZS8.2B*C6 CR65
1SS355*C6 CR59
R71 391
103 R70
104/1H C67
2SA1162Y/O*C6 Q53
103/0.125W R72
UDZS5.1B*C6 CR67
Q54
2SC2172Y/GR/O*C6
104/1H C68
224 R73
47uF/50V C69
333F R216
IC5
PS2561L1-1-V
R152 102F
512 R155
512F R133
1SS355*C6 CR60
473F R75
CR80 1SS355*C6
IC54 LM339PS*C7
1SS355*C6
IC54 LM339PS*C7
R135 223F
471/1H C103
IC54 LM339PS*C7
222F R138
R82 132F
CR82
473F R76
R84 103F
1SS355*C6 CR87
R81 392F
512F R134
CR61 N.A.
223F R136
CR64 UDZS5.1B*C6
C66 104/1H
101F R77
C83 104/1H
IC54 LM339PS*C7
1SS355*C6 CR86
R111 472F
C101 22uF/50V
C88 100uF/35V
R33 5R6/0.25W
T2 DT238
ERB37-10*UD CR16
CR26 1ZB200-Y*U3
IC4 MIP2E2DMY
C24 102/1H
4R7uF/50V C22
6R2 R38
ERA91-02*U4 CR19
ERA91-02*U4 CR70
2SA1162Y/O*C6 Q56
100uF/35V C74
472F R131
N.A C77
N.A C78
B
C
CR79 MA729-TX
471/1H C102
R80 222F
IC53 LM393PS*C7
R140 681F
15P PD TRIGGER
ERA91-02*U4 CR73
152 R125
C76 474/1J
153 R102
183F R103
CR84 1SS355*C6
R104 184F
LM393PS*C7
104 R137
R105 103F
C85 471/1H
IC53
CR78 MA729-TX
681 R132
16P AC DET
CR66 RK14*U4
L55 TSL080-4R7M3R5
12P
100uF/35V C70
C73 104/1H
100uF/35V C72
3.3V-0.3A
13P
PS2561L1-1-V IC6
R130 6R2
102F R126
511F R139
R127 103F
C97 R129 104/1H
473F
TA76432FR*C7 IC57
R128 622F
R124 FT-6T-202
R150 682F
R112 682F/0.125W
1SS355*C6 CR71
471/0.25W R74
R86 222F
Q51
R87 222F
104/1H C71
2SC2712Y/GR/O*C6
14P POWER ON

I

3.31 WAVEFORMS

Note : The encircled numbers denote measuring point in the schematic diagram.

A MR MAIN BOARDASSY

① **TP6402 (Component B)**
V: 500mV/div. H: 20µsec/div.

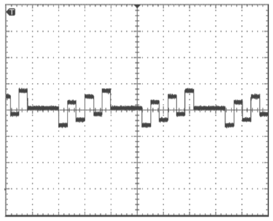

② **TP6403 (Component G)**
V: 500mV/div. H: 20µsec/div.

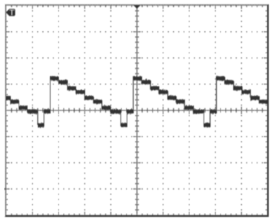

③ **TP6404 (Component R)**
V: 500mV/div. H: 20µsec/div.

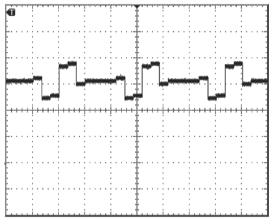

④ **TP6405 (HD2_MAIN)**
V: 1V/div. H: 20µsec/div.

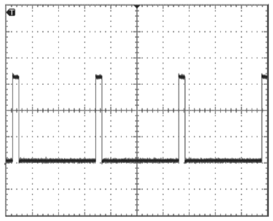

⑤ **TP6406 (VD2_MAIN)**
V: 1V/div. H: 400msec/div.

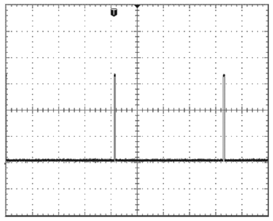

⑥ **TP6604 (Component B)**
V: 500mV/div. H: 20µsec/div.

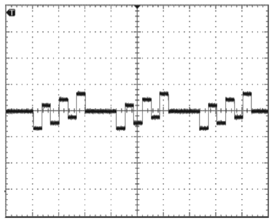

⑦ **TP6605 (Component G)**
V: 500mV/div. H: 20µsec/div.

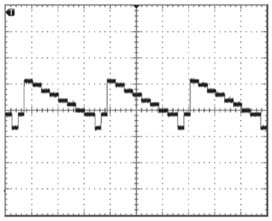

⑧ **TP6606 (Component R)**
V: 500mV/div. H: 20µsec/div.

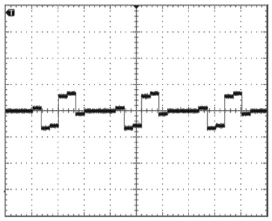

⑨ **TP6607 (HD2_SUB)**
V: 500mV/div. H: 20µsec/div.

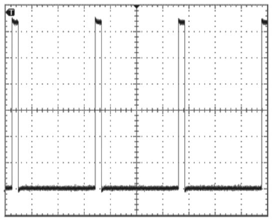

⑩ **TP6608 (VD2_SUB)**
V: 500mV/div. H: 4msec/div.

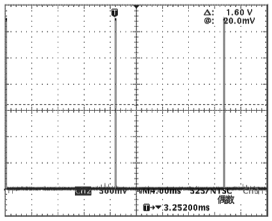

⑪ **TP7451 (MAIN_Y)**
V: 1V/div. H: 20µsec/div.

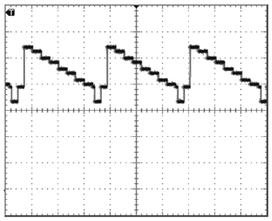

⑫ **TP7452 (MAIN_C)**
V: 1V/div. H: 20µsec/div.

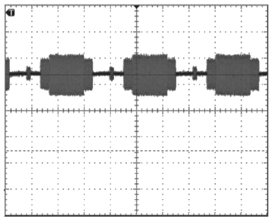

⑬ **TP7456 (SUB_Y)**
V: 1V/div. H: 20µsec/div.

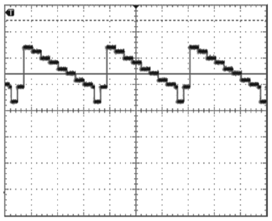

⑭ **TP7457 (SUB_C)**
V: 1V/div. H: 20µsec/div.

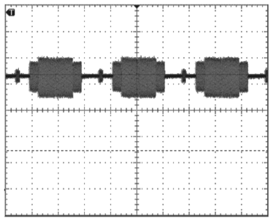

B AV BOARD ASSY

① **TP7502 (AIR_V)**
V: 1V/div. H: 10µsec/div.

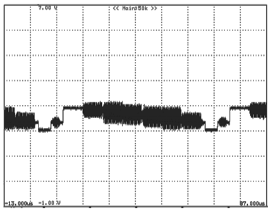

② **R7253 - R7534 (AIR_HS)**
V: 1V/div. H: 10µsec/div.

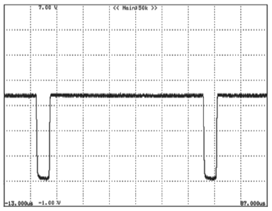

③ **IC8002-pin 63 (AIR_V)**
V: 1V/div. H: 10µsec/div.

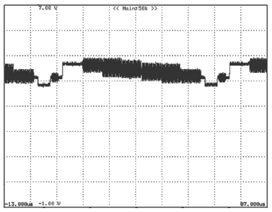

④ **IC8002-pin 44 (MAIN_Y)**
V: 1V/div. H: 10µsec/div.

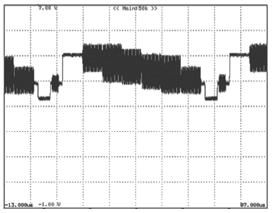

3.32 VOLTAGES

A MR MAIN BOARD ASSY — C MDR ASSY

CN7402 (AKM1234)		Voltage (V)	CN9302 (VKN1220)	
No.	Name		Name	No.
16	GND	0.00	GND	1
15	SP_L	0.00	SP_L	2
14	V+3ACT	3.32	V+3ACT	3
13	SP_R	0.00	SP_R	4
12	V+3COM	3.34	V+3COM	5
11	V+3STB	3.36	V+3STB	6
10	SP_MUTE	3.36	SP_MUTE	7
9	MTXD	3.33	MTXD	8
8	FIELD	0.01	FIELD	9
7	MRXD	3.34	MRXD	10
6	REM	3.34	REM	11
5	CST2	0.00	CST2	12
4	CST1	0.00	CST1	13
3	REQ	0.00	REQ	14
2	KEY	3.36	KEY	15
1	STB_MT	0.39	STB_MT	16

B AV BOARD ASSY — PC CARD MODULE

CN8660 (AKM1233)		Voltage (V)	CN501	
No.	Name		Name	No.
1	RXD_CARD	3.32	RXD_CARD	12
2	TXD_CARD	3.33	TXD_CARD	11
3	NC		NC	10
4	CARD_V	3.31	CARD_V	9
5	CARD_H	3.31	CARD_H	8
6	GND	0.00	GND	7
7	GND	0.00	GND	6
8	YUVD1_B	0.51	YUVD1_B	5
9	GND	0.00	GND	4
10	YUVD1_G	0.56	YUVD1_G	3
11	GND	0.00	GND	2
12	YUVD1_R	0.52	YUVD1_R	1

G REG ASSY — PC CARD MODULE

CN8502 (KM200NAB)		Voltage (V)	CN1	
No.	Name		Name	No.
1	3.3V	3.35	3.3V	1
2	3.3V	3.35	3.3V	2
3	GND	0.00	GND	3
4	GND	0.00	GND	4
5	5V	5.00	5V	5
6	GND	0.00	GND	6

A MR MAIN BOARD ASSY — TRAP SW

CN7203 (AKM1213)		Voltage (V)		
No.	Name		Name	No.
1	TRAP_SW	3.34		
2	NC			
3	V+3V_UCOM	3.34		

B AV BOARD ASSY — E FRONT ASSY

CN8653 (AKM1201)		Voltage (V)	CN9502 (AKM1201)	
No.	Name		Name	No.
50	V+9V_A	8.96	V+9V_A	1
49	V+5V_A	5.00	V+5V_A	2
48	V+3COM	3.35	V+3COM	3
47	WE_ROM_B	0.01	WE_ROM_B	4
46	PC_V	0.00	PC_V	5
45	GND	0.00	GND	6
44	PC_H	0.00	PC_H	7
43	GND	0.00	GND	8
42	PC_B	1.76	PC_B	9
41	GND	0.00	GND	10
40	PC_G	1.77	PC_G	11
39	GND	0.00	GND	12
38	PC_R	1.77	PC_R	13
37	GND	0.00	GND	14
36	GND	0.00	GND	15
35	PC_RCH	4.45	PC_RCH	16
34	GND	0.00	GND	17
33	PC_LCH	4.45	PC_LCH	18
32	GND	0.00	GND	19
31	V4_R	4.44	V4_R	20
30	GND	0.00	GND	21
29	V4_L	4.44	V4_L	22
28	GND	0.00	GND	23
27	GND	0.00	GND	24
26	V4_V	4.36	V4_V	25
25	GND	0.00	GND	26
24	V4_S2	0.12	V4_S2	27
23	V4_SPLUG	4.93	V4_SPLUG	28
22	GND	0.00	GND	29
21	V4_C	4.41	V4_C	30
20	GND	0.00	GND	31
19	V4_Y	3.93	V4_Y	32
18	GND	0.00	GND	33
17	GND	0.00	GND	34
16	HP_PLUG	0.03	HP_PLUG	35
15	HP_R	2.07	HP_R	36
14	GND	0.00	GND	37
13	HP_L	2.07	HP_L	38
12	GND	0.00	GND	39
11	GND	0.00	GND	40
10	Y_COMP4		Y_COMP4	41
9	GND	0.00	GND	42
8	GND	0.00	GND	43
7	PB_COMP4		PB_COMP4	44
6	GND	0.00	GND	45
5	GND	0.00	GND	46
4	PR_COMP4		PR_COMP4	47
3	GND	0.00	GND	48
2	GND	0.00	GND	49
1	COMP_PLUG		COMP_PLUG	50

B AV BOARD ASSY — A MR MAIN BOARD ASSY

CN8652 (AKM1201)		Voltage (V)	CN7454 (AKM1201)	
No.	Name		Name	No.
1	DSUB_DET	0.00	DSUB_DET	50
2	WE_TXT	0.01	WE_TXT	49
3	PN2	0.00	PN2	48
4	VD_TXT	0.00	VD_TXT	47
5	HD_TXT	0.20	HD_TXT	46
6	PCA_V	0.00	PCA_V	45
7	PCA_H	0.00	PCA_H	44
8	PCA_V_SUB	3.35	PCA_V_SUB	43
9	PCA_H_SUB	3.35	PCA_H_SUB	42
10	RXD_DT	3.32	RXD_DT	41
11	TXD_DT	3.33	TXD_DT	40
12	CLAMP_SUB	0.20	CLAMP_SUB	39
13	SUBC_PR	4.44	SUBC_PR	38
14	GND	0.00	GND	37
15	SUBC_Y	4.44	SUBC_Y	36
16	GND	0.00	GND	35
17	SUBC_PB	4.41	SUBC_PB	34
18	GND	0.00	GND	33
19	R_TXT_SUB	4.78	R_TXT_SUB	32
20	G_TXT_SUB	4.78	G_TXT_SUB	31
21	B_TXT_SUB	4.78	B_TXT_SUB	30
22	GND	0.00	GND	29
23	MAINC_PR	4.44	MAINC_PR	28
24	GND	0.00	GND	27
25	MAINC_Y	4.42	MAINC_Y	26
26	GND	0.00	GND	25
27	MAINC_PB	4.43	MAINC_PB	24
28	GND	0.00	GND	23
29	R_TXT_MAIN	4.78	R_TXT_MAIN	22
30	G_TXT_MAIN	4.78	G_TXT_MAIN	21
31	B_TXT_MAIN	4.78	B_TXT_MAIN	20
32	GND	0.00	GND	19
33	B_DA_SUB	0.68	B_DA_SUB	18
34	G_DA_SUB	0.68	G_DA_SUB	17
35	R_DA_SUB	0.68	R_DA_SUB	16
36	GND	0.00	GND	15
37	SUB_C	4.32	SUB_C	14
38	GND	0.00	GND	13
39	SUB_Y	3.20	SUB_Y	12
40	GND	0.00	GND	11
41	B_DA_MAIN	1.08	B_DA_MAIN	10
42	GND	0.00	GND	9
43	G_DA_MAIN	1.08	G_DA_MAIN	8
44	GND	0.00	GND	7
45	R_DA_MAIN	1.08	R_DA_MAIN	6
46	GND	0.00	GND	5
47	MAIN_C	4.41	MAIN_C	4
48	GND	0.00	GND	3
49	MAIN_Y	4.39	MAIN_Y	2
50	GND	0.00	GND	1

B AV BOARD ASSY — A MR MAIN BOARD ASSY

CN8654 (AKM1201)		Voltage (V)	CN7455 (AKM1201)	
No.	Name		Name	No.
1	SP_R	0.00	SP_R	50
2	GND	0.00	GND	49
3	SP_L	0.00	SP_L	48
4	GND	0.00	GND	47
5	HDMI_RCH	2.50	HDMI_RCH	46
6	GND	0.00	GND	45
7	HDMI_LCH	2.22	HDMI_LCH	44
8	GND	0.00	GND	43
9	PIXEL_CLK_IN	1.60	PIXEL_CLK_IN	42
10	B4	0.00	B4	41
11	B3	0.00	B3	40
12	B2	0.00	B2	39
13	B1	0.00	B1	38
14	B0	0.00	B0	37
15	G5	0.00	G5	36
16	G4	0.05	G4	35
17	G3	0.05	G3	34
18	G2	0.00	G2	33
19	G1	0.00	G1	32
20	G0	0.00	G0	31
21	R4	0.00	R4	30
22	R3	0.00	R3	29
23	R2	0.00	R2	28
24	R1	0.00	R1	27
25	R0	0.00	R0	26
26	AIR_AFT	3.08	AIR_AFT	25
27	AIR_HS	3.21	AIR_HS	24
28	RST_IF	3.37	RST_IF	23
29	TXD_WR	3.33	TXD_WR	22
30	RXD_WR	3.33	RXD_WR	21
31	SDA_AV	4.99	SDA_AV	20
32	SCL_AV	5.00	SCL_AV	19
33	RXD_IF	3.36	RXD_IF	18
34	TXD_IF	3.33	TXD_IF	17
35	CLK_IF	3.33	CLK_IF	16
36	REQ_IF	0.01	REQ_IF	15
37	BUSY_IF	0.01	BUSY_IF	14
38	CE_IF	3.33	CE_IF	13
39	RESET_TXT	3.29	RESET_TXT	12
40	RELAY	3.17	RELAY	11
41	SR_OUT	3.34	SR_OUT	10
42	PSW1	0.02	PSW1	9
43	PD_MAIN	0.12	PD_MAIN	8
44	CLAMP_MAIN	3.35	CLAMP_MAIN	7
45	WE_ROM_B	0.01	WE_ROM_B	6
46	MON_MUTE	0.01	MON_MUTE	5
47	HP_VOL	0.13	HP_VOL	4
48	KEYSCAN	3.36	KEYSCAN	3
49	STB_MT	0.04	STB_MT	2
50	CST1	0.00	CST1	1

G REG ASSY

A MR MAIN BOARD ASSY

CN8651 (KM200NA15)		Voltage (V)	CN7451 (AKM1269)	
No.	Name		Name	No.
15	GND_D	0.00	GND_D	1
14	V+3V_DD	3.38	V+3V_DD	2
13	V+3V_DD	3.28	V+3V_DD	3
12	GND_D	0.00	GND_D	4
11	V+1V_DD	1.48	V+1V_DD	5
10	V+1V_DD	1.48	V+1V_DD	6
9	GND_D	0.00	GND_D	7
8	V+6V	6.75	V+6V	8
7	GND	0.00	GND	9
6	V+5V_AV	5.00	V+5V_AV	10
5	GND	0.00	GND	11
4	V+3V_UCOM	3.34	V+3V_UCOM	12
3	GND	0.00	GND	13
2	V+3V_STB	3.36	V+3V_STB	14
1	GND	0.00	GND	15

B AV BOARD ASSY

F LED ASSY

CN8656 (KM200NA7)		Voltage (V)	CN9651 (S7B-PH-SM3)	
No.	Name		Name	No.
1	V+3V_LED	3.37	V+3V_LED	1
2	LED_G	0.04	LED_G	2
3	LED_R	3.37	LED_R	3
4	GND	0.00	GND	4
5	LED_MDM	0.85	LED_MDM	5
6	LED_FCT	3.37	LED_FCT	6
7	GND	0.00	GND	7

A MR MAIN BOARD ASSY

E FRONT ASSY

CN7202 (AKM1242)		Voltage (V)	CN9601 (KM200NA3)	
No.	Name		Name	No.
1	5V	5.00	5V	1
2	TEMP1	1.74	TEMP1	2
3	STBGND	0.00	STBGND	3

G REG ASSY

I POWER SUPPLY UNIT

CN8501 (KM200NA16)		Voltage (V)	CP51 (KM200NA16)	
No.	Name		Name	No.
1	V+16.5V	19.33	V+16.5V	1
2	GND	-0.01	GND	2
3	V+12V	12.23	V+12V	3
4	V+12V	12.23	V+12V	4
5	GND	-0.01	GND	5
6	GND	-0.01	GND	6
7	V+6.5V	6.80	V+6.5V	7
8	V+6.5V	6.80	V+6.5V	8
9	GND	-0.01	GND	9
10	GND	-0.01	GND	10
11	NC	1.18	NC	11
12	V+3V_STB	3.37	V+3V_STB	12
13	GND	-0.01	GND	13
14	RELAY	3.17	RELAY	14
15	PD_TRIGGER	0.12	PD_TRIGGER	15
16	AC_DET	3.35	AC_DET	16

B AV BOARD ASSY

D SR ASSY

CN8658 (AKM1233)		Voltage (V)	CN9452 (VKN1216)	
No.	Name		Name	No.
1	V+5V_SR	5.06	V+5V_SR	12
2	V+3V_SR	3.40	V+3V_SR	11
3	TXD	3.36	TXD	10
4	RXD	3.36	RXD	9
5	NC	3.37	NC	8
6	SR_EN_B	3.36	SR_EN_B	7
7	GND	0.00	GND	6
8	SR_OUT	3.34	SR_OUT	5
9	SR_IN	3.37	SR_IN	4
10	GND	0.00	GND	3
11	NC		NC	2
12	GND	0.00	GND	1

4. PCB CONNECTION DIAGRAM

NOTE FOR PCB DIAGRAMS :

1. Part numbers in PCB diagrams match those in the schematic diagrams.
2. A comparison between the main parts of PCB and schematic diagrams is shown below.

Symbol In PCB Diagrams	Symbol In Schematic Diagrams	Part Name
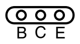 B C E	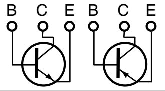 B C E B C E	Transistor
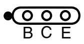 B C E	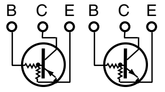 B C E B C E	Transistor with resistor
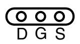 D G S	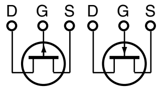 D G S D G S	Field effect transistor
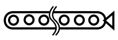	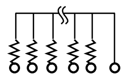	Resistor array
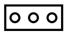	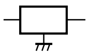	3-terminal regulator

3. The parts mounted on this PCB include all necessary parts for several destinations.
   For further information for respective destinations, be sure to check with the schematic diagram.
4. View point of PCB diagrams.

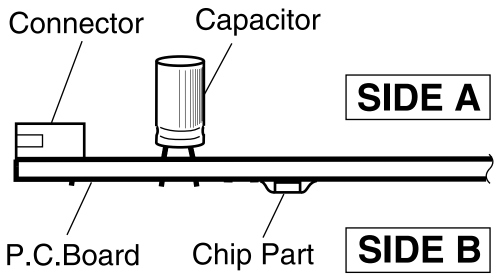
Connector
Capacitor
SIDE A
P.C.Board
Chip Part
SIDE B

4.1 AC SW and MDR ASSYS

SIDE A

C MDR ASSY

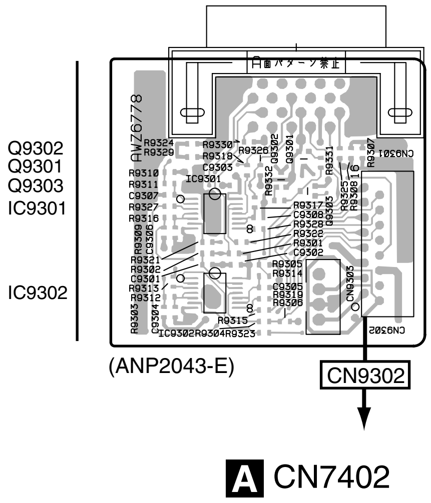
Q9302
Q9301
Q9303
IC9301
IC9302
AWZ6778
A面パターン禁止
R9324
R9329
R9330
R9318
R9326
C9303
Q9302
Q9301
R9331
R9307
CN9301
R9310
R9311
IC9301
R9332
C9307
R9327
R9316
R9309
C9306
R9317
C9308
R9328
R9322
R9301
C9302
Q9303
R9325
R9308
16
8
R9321
R9302
C9301
R9313
R9312
R9305
R9314
C9305
R9319
R9306
CN9303
R9303
C9304
R9315
IC9302
R9304
R9323
CN9302
(ANP2043-E)
CN9302
A CN7402

SIDE B

C MDR ASSY

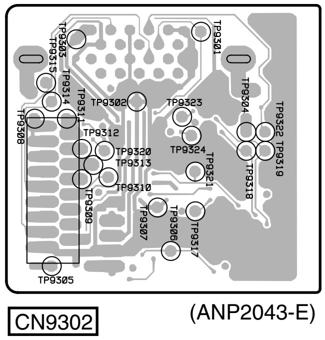
TP9303
TP9315
TP9301
TP9314
TP9311
TP9302
TP9323
TP9304
TP9322
TP9308
TP9312
TP9320
TP9313
TP9324
TP9321
TP9319
TP9318
TP9310
TP9309
TP9307
TP9306
TP9317
TP9305
CN9302
(ANP2043-E)

H AC SW ASSY

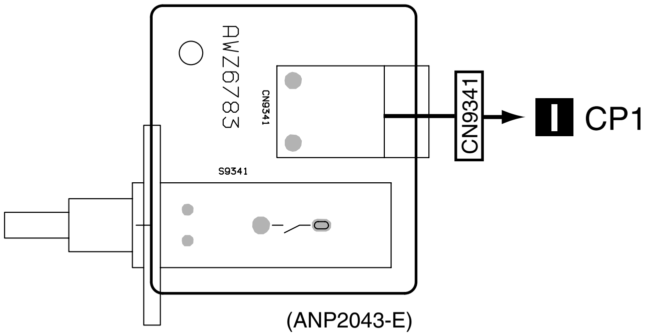
AWZ6783
CN9341
S9341
CN9341
I CP1
(ANP2043-E)

H AC SW ASSY

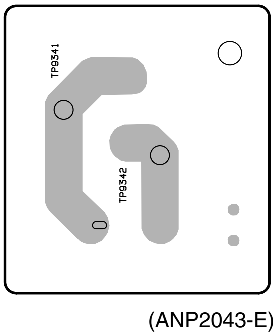
TP9341
TP9342
(ANP2043-E)

C **H**

C **H**

4.2 REG ASSY

SIDE A **SIDE A**

G REG ASSY

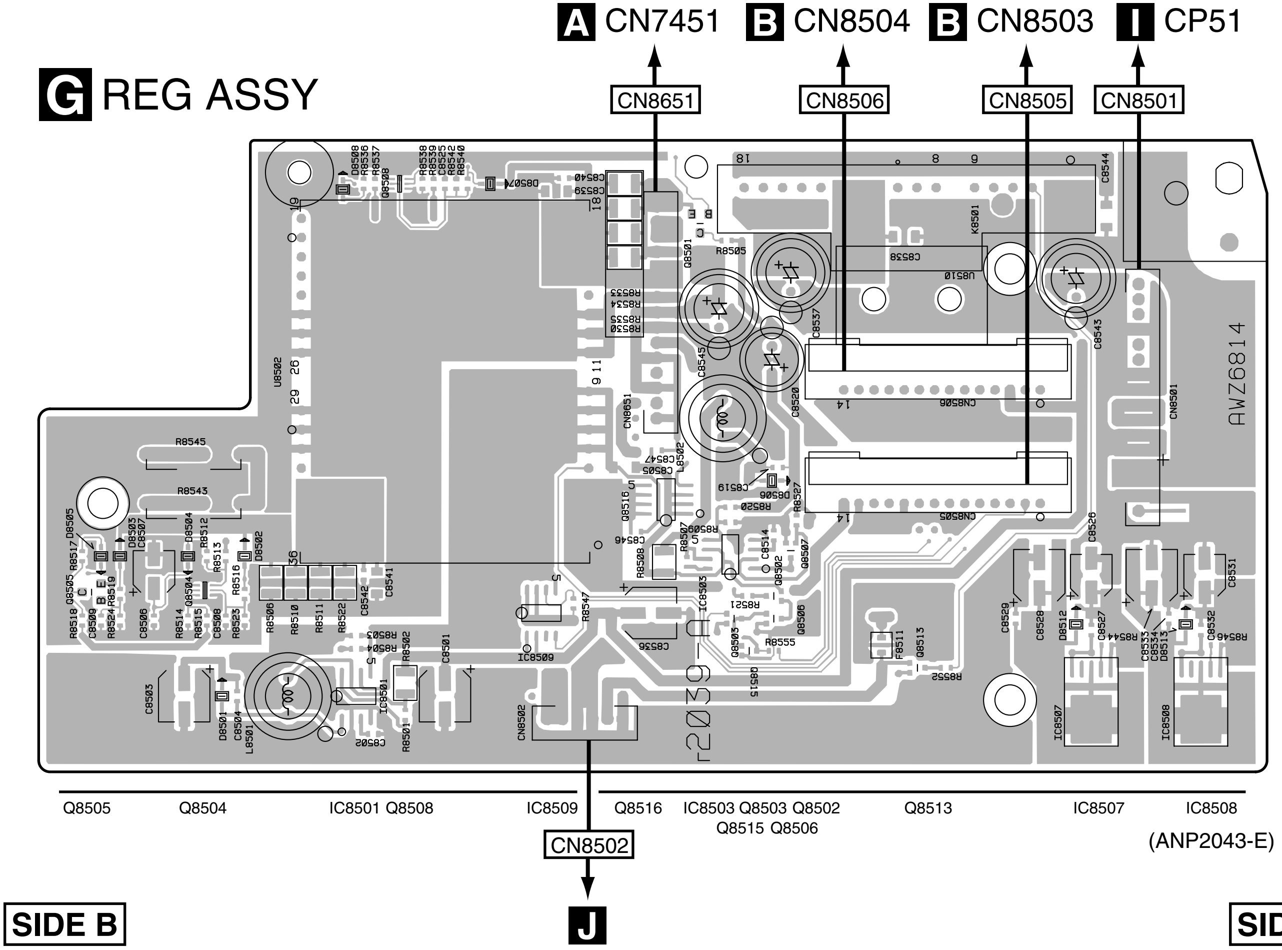
A CN7451
B CN8504
B CN8503
I CP51
CN8651
CN8506
CN8505
CN8501
AWZ6814
Q8505
Q8504
IC8501 Q8508
IC8509
Q8516
IC8503 Q8503 Q8502
Q8515 Q8506
Q8513
IC8507
IC8508
(ANP2043-E)
CN8502
J

SIDE B **SIDE B**

G REG ASSY

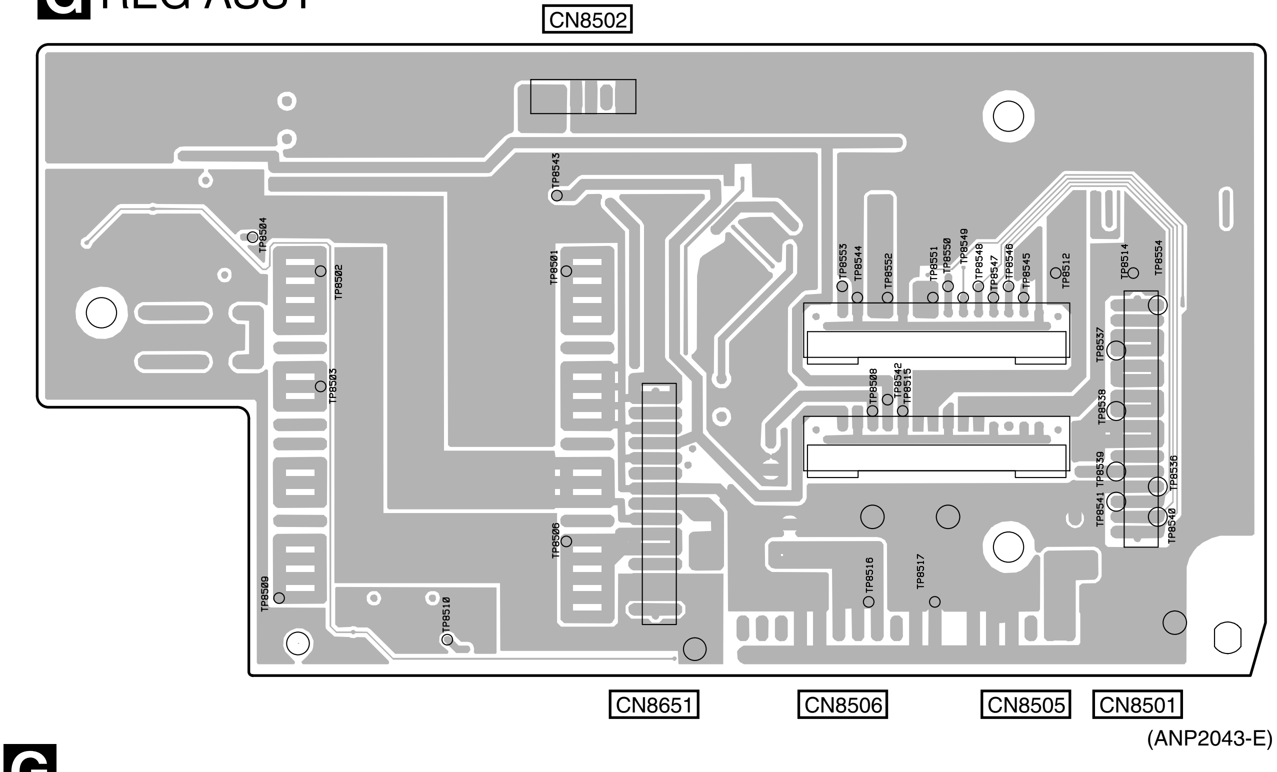
CN8502
CN8651
CN8506
CN8505
CN8501
(ANP2043-E)

G **G**

4.3 MR MAIN BOARD ASSY

SIDE A

A MR MAIN BOARD ASSY

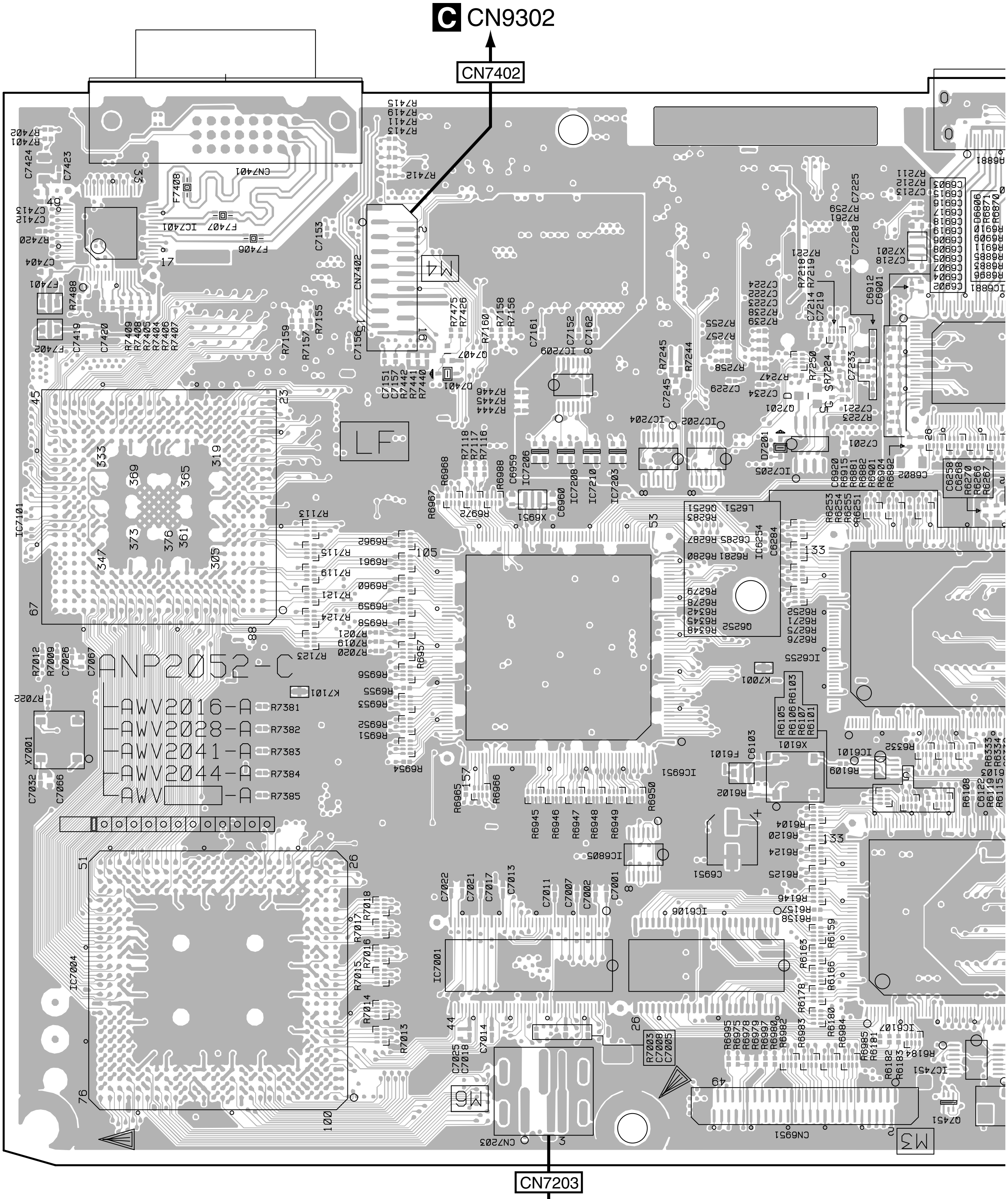
C CN9302
CN7402
CN7401
IC7401
IC7101
ANP2052-C
AWV2016-A
AWV2028-A
AWV2041-A
AWV2044-A
AWV-A
R7381
R7382
R7383
R7384
R7385
M4
LF
M6
M3
IC7004
IC7001
IC6951
IC7209
IC7206
IC7208
IC7210
IC7203
IC7204
IC7202
IC7205
IC6805
IC6106
IC6101
IC6255
IC6107
IC7451
CN6951
CN7203
CN7203

IC7401 Q7407 IC7209 Q7201 IC6881 IC688
IC7101 IC7206 IC7208 IC7210 IC7203 IC7204 IC7202 IC7205 IC6252 Q6251 IC625
IC6951 IC6101 IC6103 IC6
IC6805 IC6107 Q610
IC7004 IC7001 IC6101 Q7451 IC7451

TRAP SW

A

SIDE A

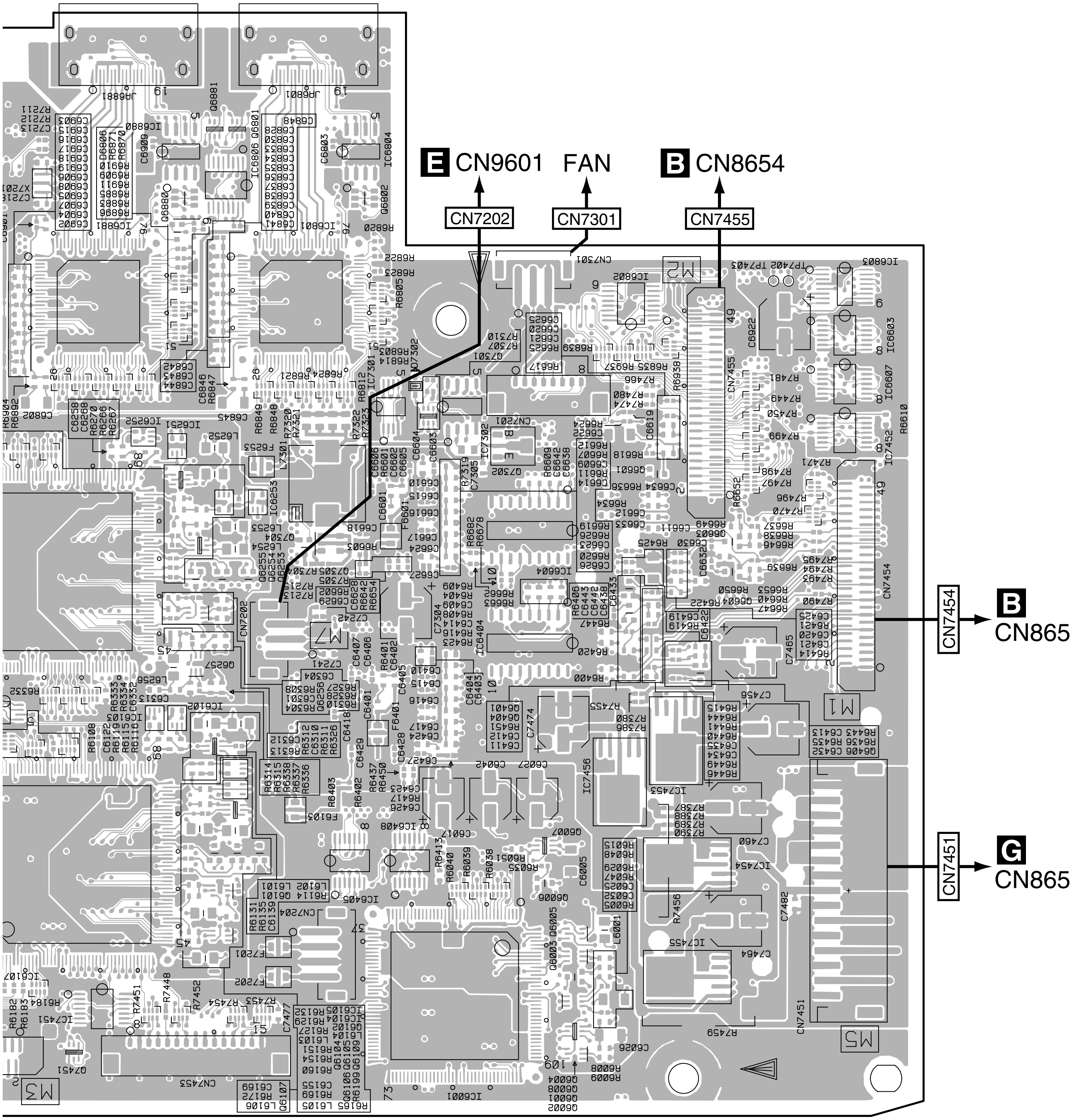
E CN9601
FAN
B CN8654
CN7202
CN7301
CN7455
CN7454
B CN8652
CN7451
G CN8651
M1
M2
M3
M5
M7

(ANP2052-C)

IC6881 IC6880 Q6881 Q6880 IC6806 Q6801 IC6801 Q6802 IC6804 Q7301 IC6802 IC6603 IC6803 IC6607
252 Q6251 IC6251 Q6255 Q6252 IC6254 IC6253 IC7301 Q7301 IC7302 Q7302 Q6601 Q6603 IC7452
6101 IC6103 IC6102 Q6257 Q6256 Q6254 Q6253 Q6201 Q7305 IC6404 IC6604 Q6401 Q6404 Q6406 Q6604
IC6107 Q6104 Q6101 Q6102 Q6105 Q6109 IC6405 IC6408 Q6006 Q6007 IC7456 IC7454 IC7453
Q7451 IC7451 Q6107 Q6106 IC6001 Q6003 Q6008 Q6005 Q6004 Q6001 Q6002 IC7455

A

SIDE B

A MR MAIN BOARD ASSY

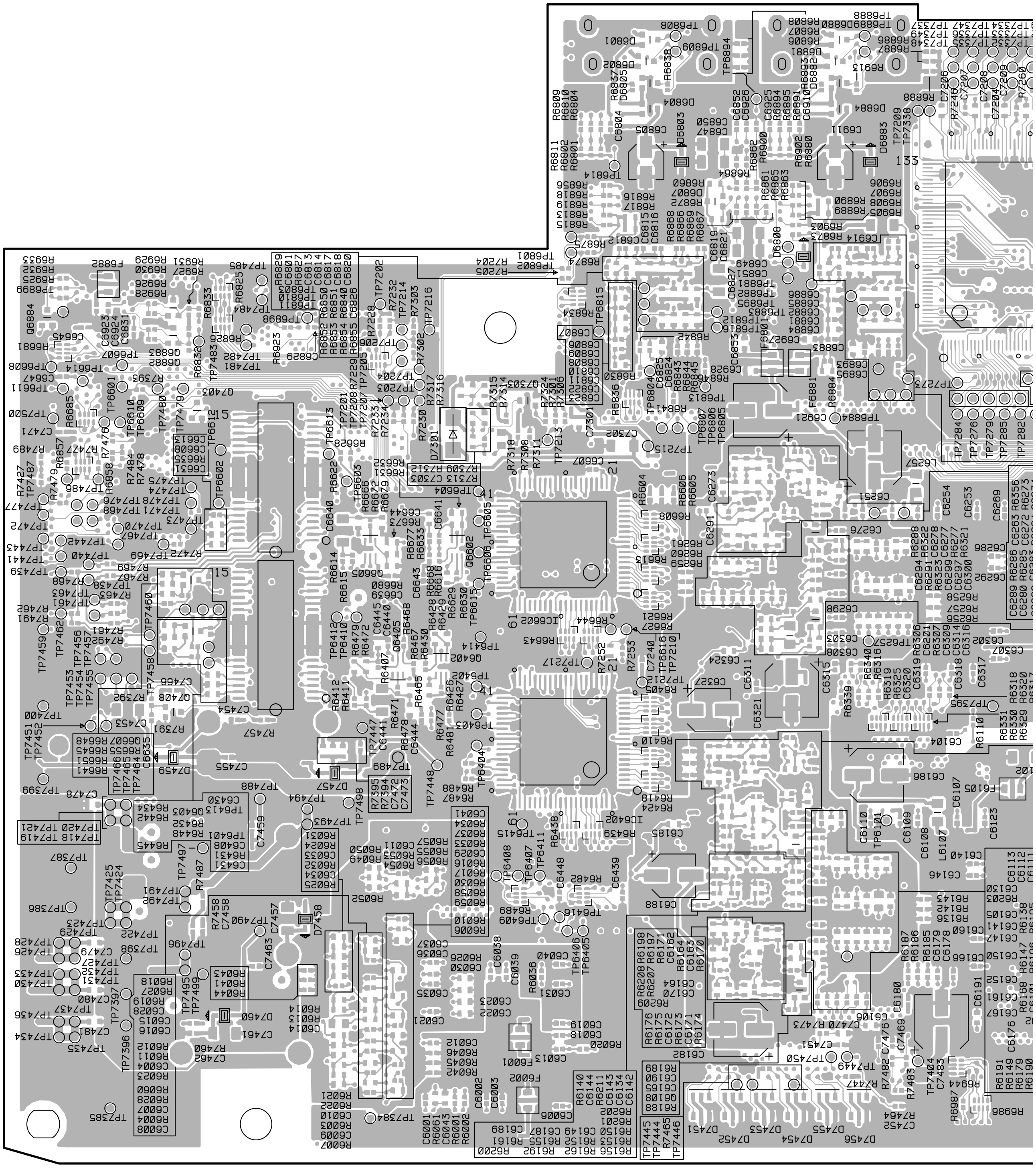

Q6884 Q6883 Q6882 IC7207

Q7408 Q7403 Q6607 Q6605 Q6405 Q6402 Q6602 IC6602 IC6402 Q6258 Q6259

Q6110 Q6108

A

SIDE B

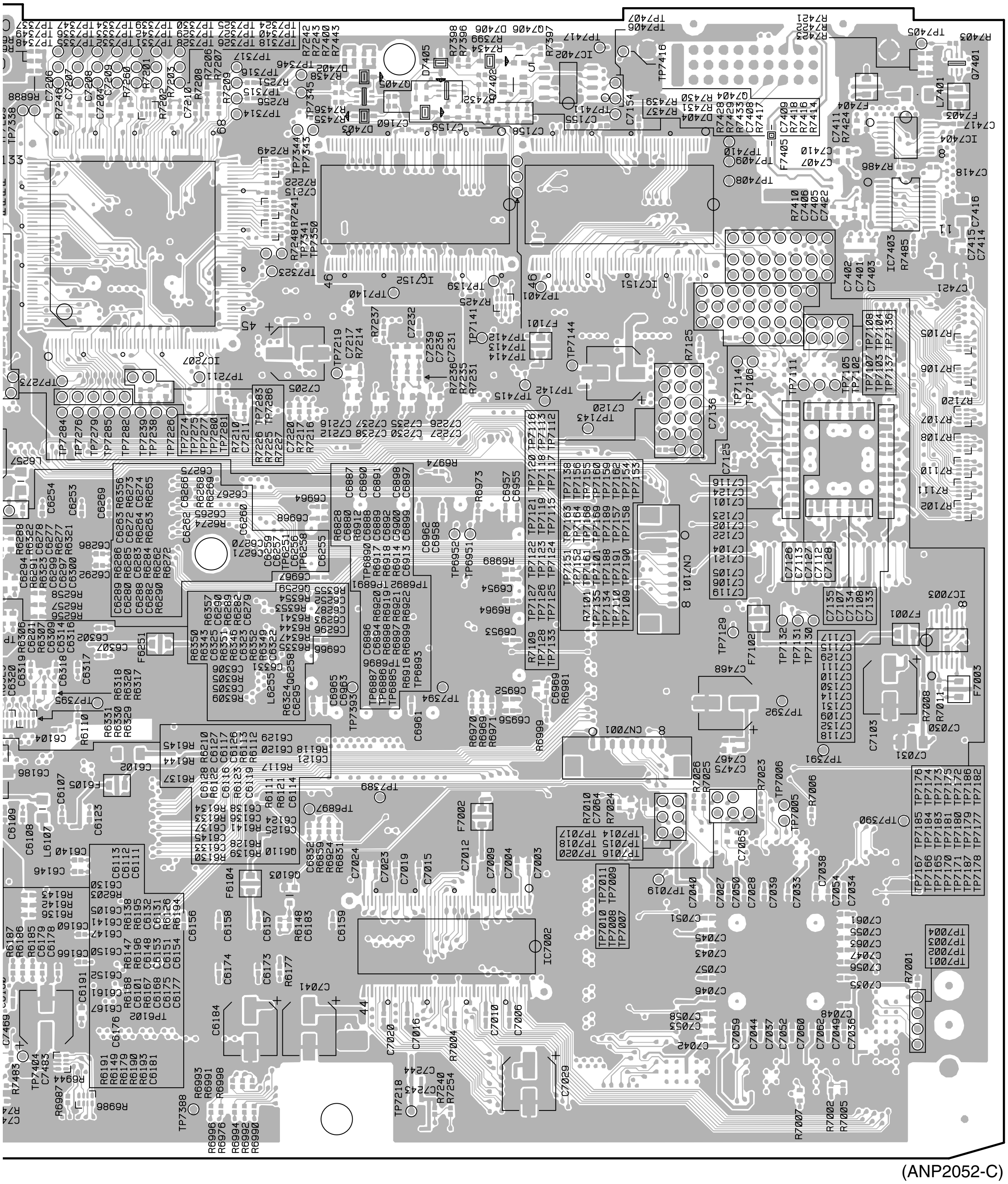
IC7207
IC7152
IC7151
IC7404
IC7403
IC7003
IC7002
CN7101
CN7001
Q7401
Q6103

(ANP2052-C)

IC7207 Q7405 IC7152 Q7404 Q7406 Q7402 IC7151 IC7404 IC7403 Q7401
IC7003
Q6103 IC7002

A

4.4 AV BOARD and SR ASSYS

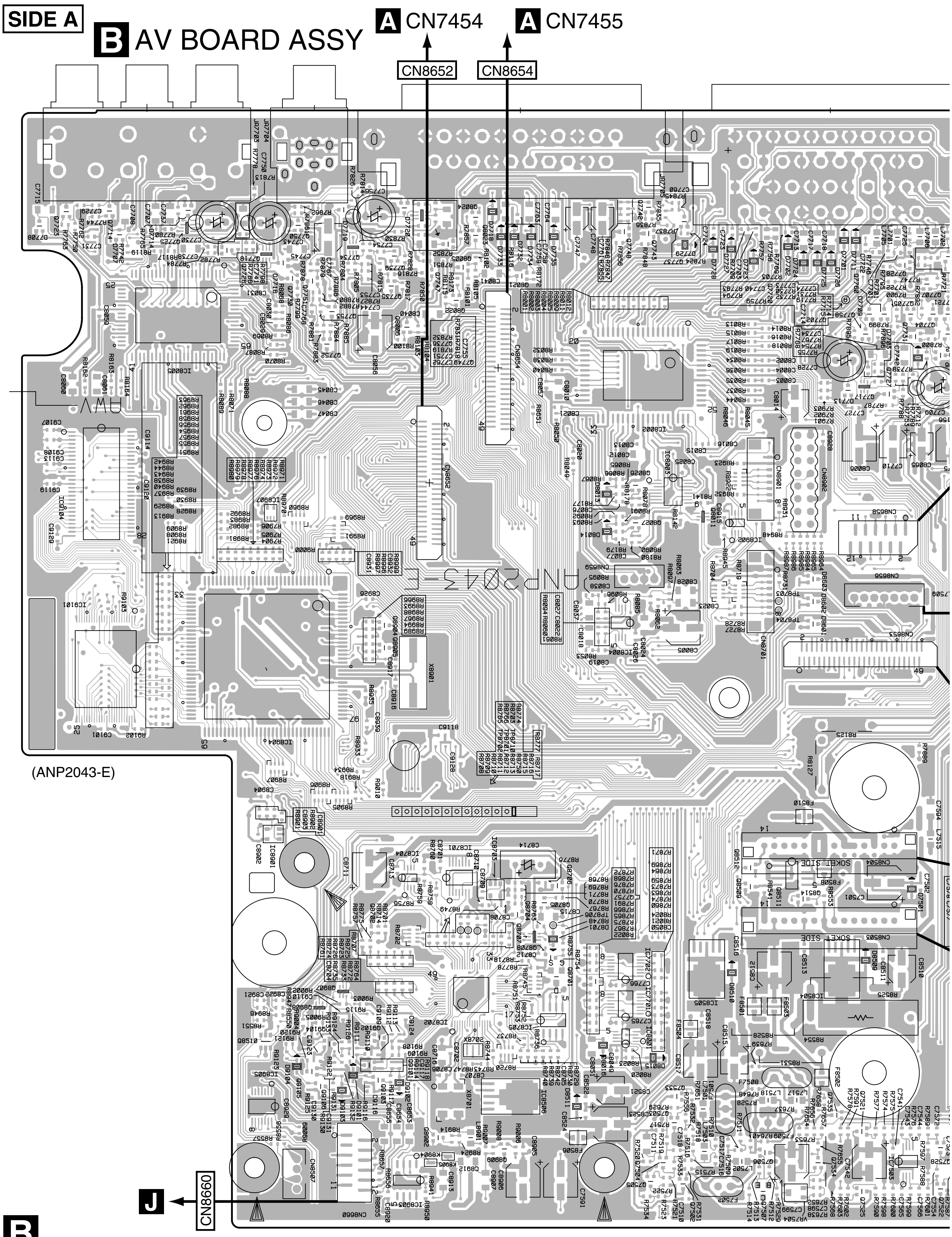
SIDE A
B AV BOARD ASSY
A CN7454
A CN7455
CN8652
CN8654
(ANP2043-E)
ANP2043-E
J
CN8660
B

SIDE A

D SR ASSY

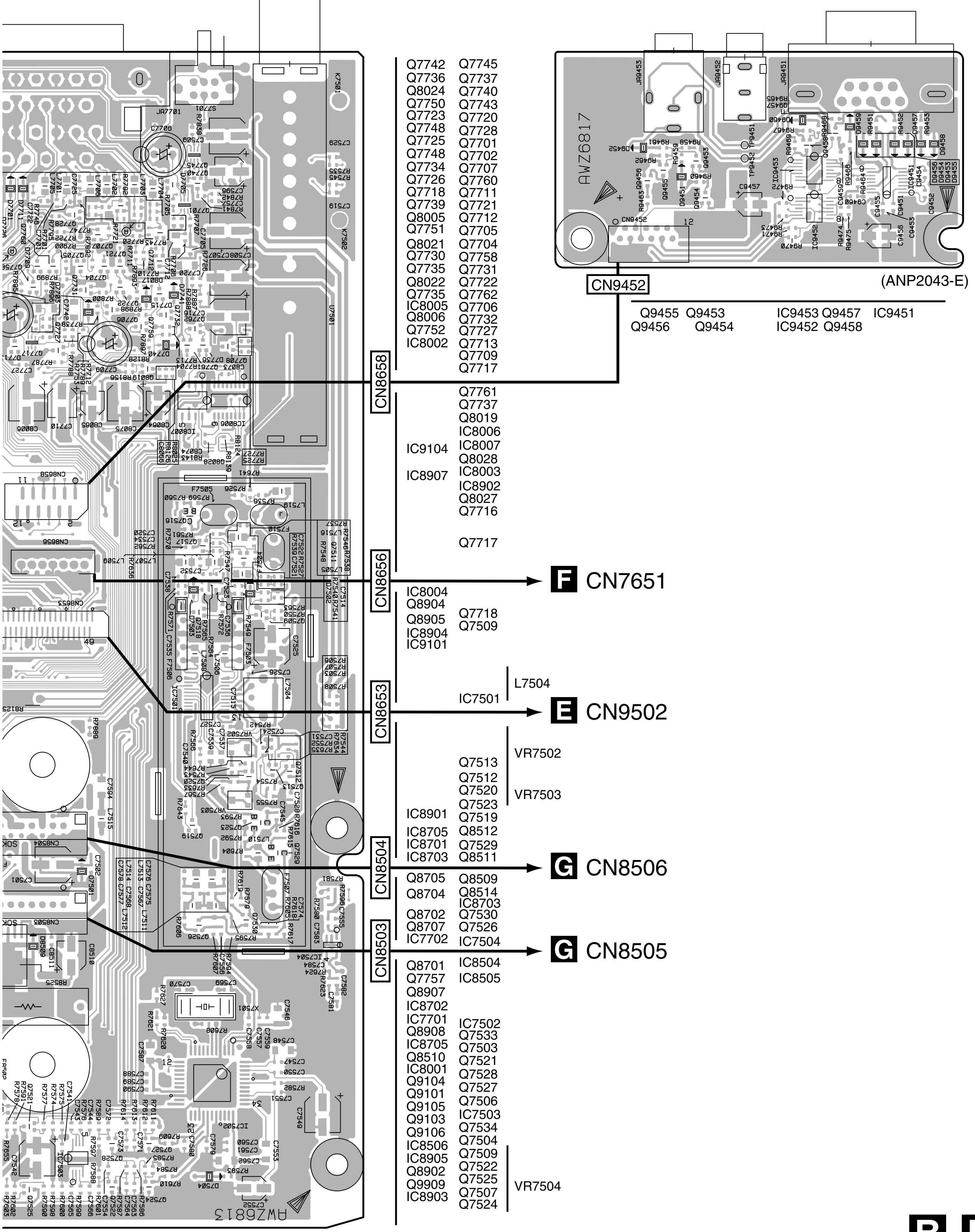

CN9452
(ANP2043-E)
AWZ6817
JA9453
JA9452
JA9451
Q9455 Q9453
Q9456 Q9454
IC9453 Q9457
IC9452 Q9458
IC9451
CN8658
Q7742 Q7736 Q8024 Q7750 Q7723 Q7748 Q7725 Q7748 Q7734 Q7726 Q7718 Q7739 Q8005 Q7751 Q8021 Q7730 Q7735 Q8022 Q7735 IC8005 Q8006 Q7752 IC8002
Q7745 Q7737 Q7740 Q7743 Q7720 Q7728 Q7701 Q7702 Q7707 Q7760 Q7711 Q7721 Q7712 Q7705 Q7704 Q7758 Q7731 Q7722 Q7762 Q7706 Q7732 Q7727 Q7713 Q7709 Q7717
Q7761 Q7737 Q8019 IC8006 IC8007 Q8028 IC8003 IC8902 Q8027 Q7716
IC9104
IC8907
Q7717
CN8656
F CN7651
IC8004 Q8904 Q8905 IC8904 IC9101
Q7718 Q7509
L7504
IC7501
CN8653
E CN9502
Q7513 Q7512 Q7520 Q7523
VR7502
VR7503
IC8901 IC8705 IC8701 IC8703
Q7519 Q8512 Q7529 Q8511
CN8504
G CN8506
Q8705 Q8704 Q8702 Q8707 IC7702
Q8509 Q8514 IC8703 Q7530 Q7526 IC7504
CN8503
G CN8505
Q8701 Q7757 Q8907 IC8702 IC7701 Q8908 IC8705 Q8510 IC8001 Q9104 Q9101 Q9105 Q9103 Q9106 IC8506 IC8905 Q8902 Q9909 IC8903
IC8504 IC8505
IC7502 Q7533 Q7503 Q7521 Q7528 Q7527 Q7506 IC7503 Q7534 Q7504 Q7509 Q7522 Q7525 Q7507 Q7524
VR7504
AWZ6813

B **D**

SIDE B

D SR ASSY

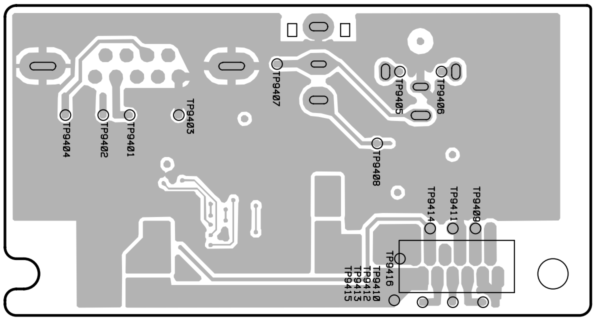
TP9404
TP9402
TP9401
TP9403
TP9407
TP9405
TP9406
TP9408
TP9414
TP9411
TP9409
TP9416
TP9410
TP9412
TP9413
TP9415

(ANP2043-E)

CN9452

Q7746
Q7744 Q7716
Q7738 Q7713
Q7536 Q7756
Q7719 Q7711
Q7724 Q7733
Q7703 Q7715
Q7710
Q8007
Q8008
Q8025
Q800
Q7514
CN8656
IC8906
IC9108
IC9106
CN8504
Q7501
CN8503
IC9105
IC9107
Q7508
Q7515
Q7531
Q7532
Q8903
Q8901

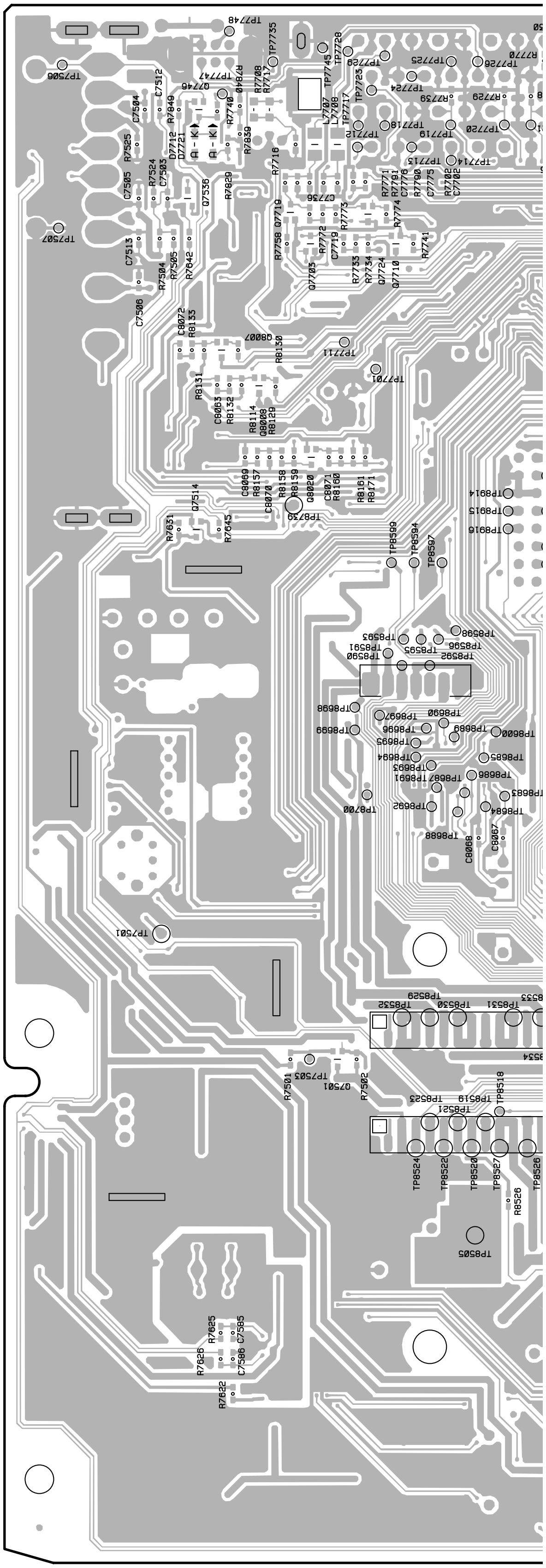
TP7506
TP7507
TP7748
TP7735
TP7745
TP7728
TP7747
Q7746
C7512
C7504
R7840
R7525
R7524
C7505
C7503
R7740
R7839
R7716
Q7536
R7829
C7513
R7504
R7505
R7842
C7506
C8072
R8133
R8130
TP7711
TP7701
R8131
C8063
R8132
R8114
Q8008
R8129
C8069
R8157
R8158
R8159
Q8020
C8071
R8160
R8161
R8171
C8070
TP8739
Q7514
R7631
R7645
TP8599
TP8594
TP8597
TP8914
TP8915
TP8916
TP8598
TP8593
TP8595
TP8596
TP8591
TP8590
TP8592
TP8698
TP8699
TP8700
TP7501
TP8532
TP8529
TP8530
TP8531
R7501
TP7503
Q7501
R7502
TP8523
TP8519
TP8510
TP8521
TP8524
TP8522
TP8520
TP8527
TP8526
R8526
TP8505
R7626
R7625
C7586
C7585
R7632

SIDE B

A

B AV BOARD ASSY

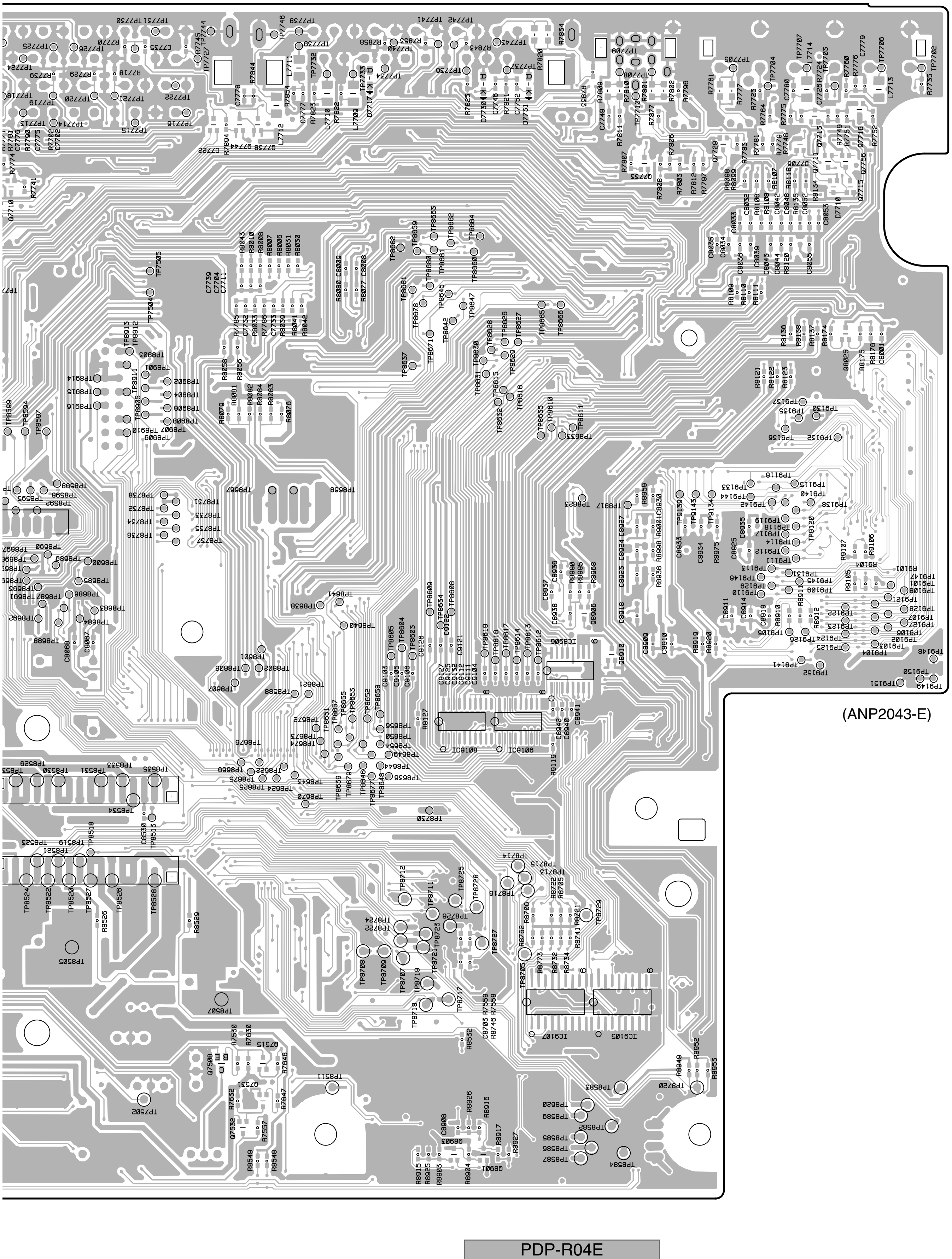
IC9108
IC9106
IC9107
IC9105

(ANP2043-E)

B
C
D
E
F

B

4.5 FRONT and LED ASSY

SIDE A

SIDE A

E FRONT ASSY

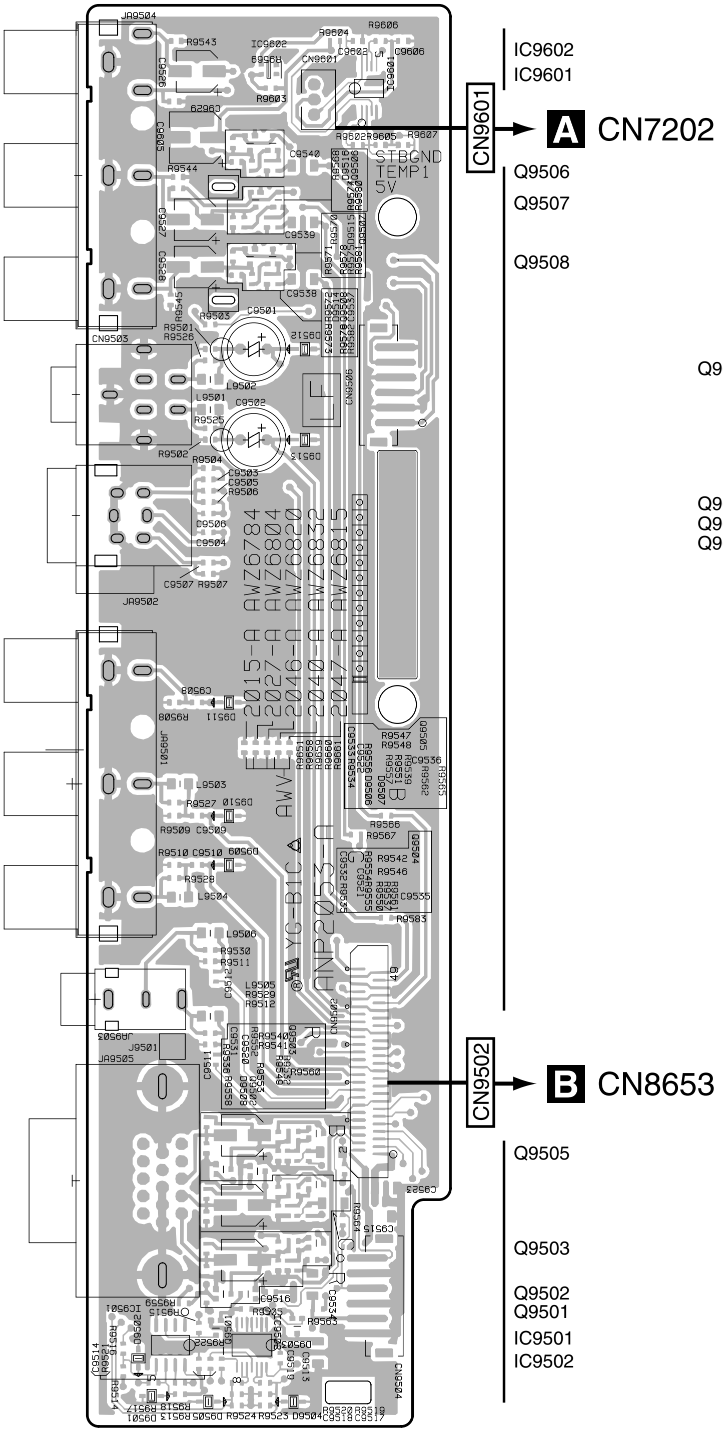
IC9602
IC9601
CN9601
A CN7202
Q9506
Q9507
Q9508
STBGND
TEMP1
5V
AWZ6784 2015-A
AWZ6804 2027-A
AWZ6820 2046-A
AWZ6832 2040-A
AWZ6815 2047-A
AWV
ANP2053-A
YG-B1C
CN9502
B CN8653
Q9505
Q9503
Q9502
Q9501
IC9501
IC9502

(ANP2053-A)

F LED ASSY

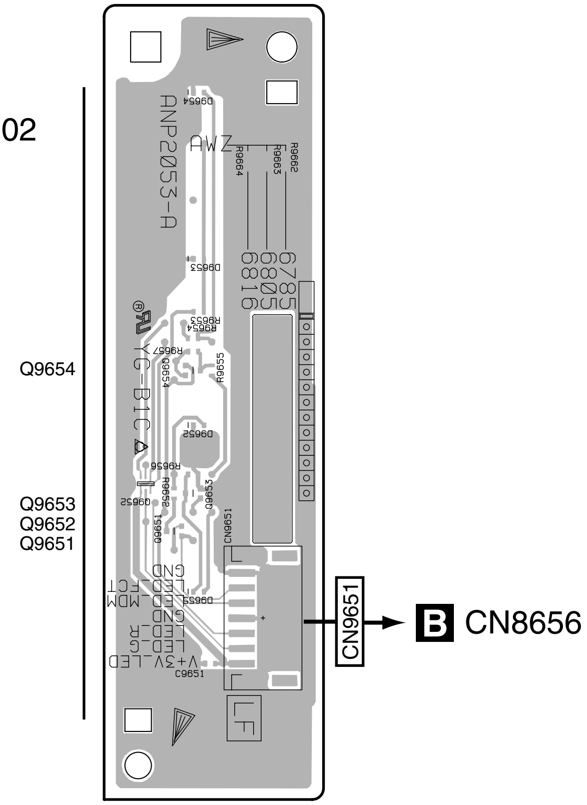
ANP2053-A
AWZ
6785
6805
6816
YG-B1C
Q9654
Q9653
Q9652
Q9651
GND
LED_FCT
LED_MDM
GND
LED_R
LED_G
V+3V_LED
LF
CN9651
B CN8656

(ANP2053-A)

SIDE B

SIDE B

A

F LED ASSY

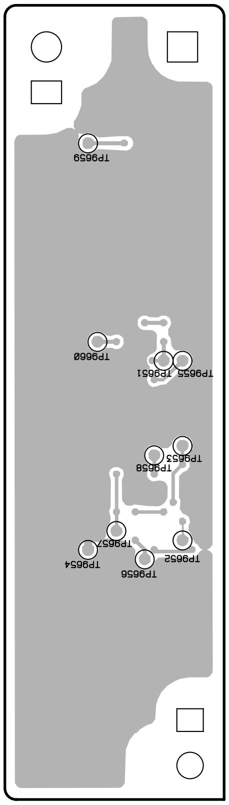
TP9659
TP9660
TP9651
TP9655
TP9653
TP9658
TP9657
TP9654
TP9656
TP9652

(ANP2053-A)

E FRONT ASSY

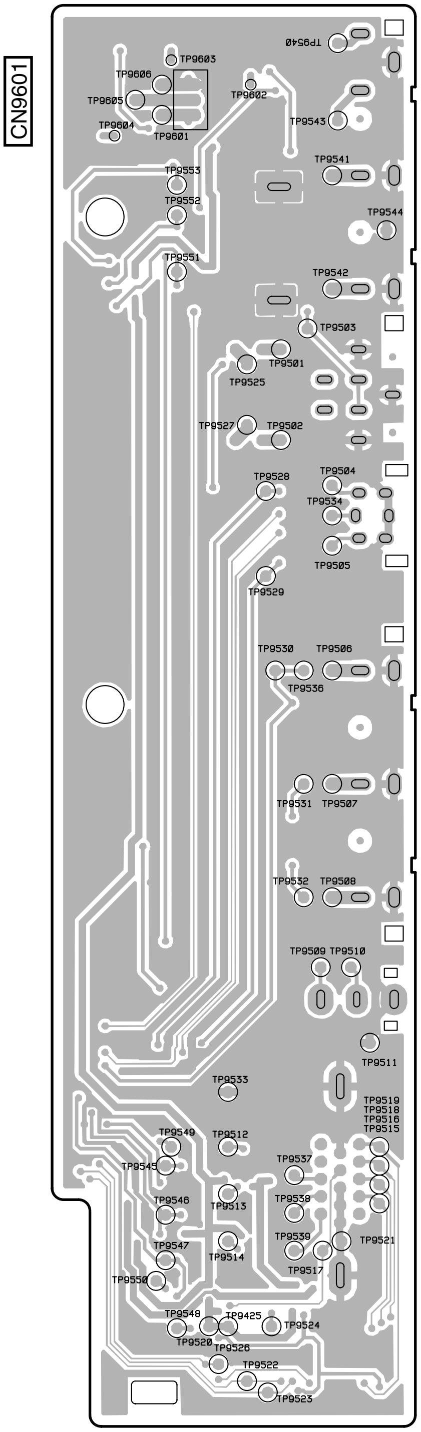
CN9601
TP9540
TP9603
TP9606
TP9605
TP9602
TP9604
TP9601
TP9543
TP9553
TP9552
TP9541
TP9544
TP9551
TP9542
TP9503
TP9501
TP9525
TP9527
TP9502
TP9528
TP9504
TP9534
TP9505
TP9529
TP9530
TP9506
TP9536
TP9531
TP9507
TP9532
TP9508
TP9509
TP9510
TP9511
TP9533
TP9519
TP9518
TP9516
TP9515
TP9549
TP9512
TP9545
TP9537
TP9546
TP9513
TP9538
TP9539
TP9521
TP9547
TP9514
TP9517
TP9550
TP9548
TP9425
TP9524
TP9520
TP9526
TP9522
TP9523

(ANP2053-A)

B

C

D

E

F

5. PCB PARTS LIST

NOTES: ● *Parts marked by "NSP" are generally unavailable because they are not in our Master Spare Parts List.*

● *The ⚠ mark found on some component parts indicates the importance of the safety factor of the part. Therefore, when replacing, be sure to use parts of identical designation.*

● *When ordering resistors, first convert resistance values into code form as shown in the following examples.*

Ex.1 When there are 2 effective digits (any digit apart from 0), such as 560 ohm and 47k ohm (tolerance is shown by J=5%, and K=10%).

560 Ω → 56×10^1 → 561 .... RD1/4PU $\boxed{5}\boxed{6}\boxed{1}$ J
47k Ω → 47×10^3 → 473 .... RD1/4PU $\boxed{4}\boxed{7}\boxed{3}$ J
0.5 Ω → R50 .... RN2H $\boxed{R}\boxed{5}\boxed{0}$ K
1 Ω → 1R0 .... RS1P $\boxed{1}\boxed{R}\boxed{0}$ K

Ex.2 When there are 3 effective digits (such as in high precision metal film resistors).

5.62k Ω → 562×10^1 → 5621 .... RN1/4PC $\boxed{5}\boxed{6}\boxed{2}\boxed{1}$ F

LIST OF ASSEMBLIES

Mark	No. Description	Part No.
NSP	1..MR AV BOARD ASSY	AWV2039
	2..AV BOARD ASSY	AWZ6813
	2..REG ASSY	AWZ6814
	2..MDR ASSY	AWZ6778
	2..SR ASSY	AWZ6817
	2..AC SW ASSY	AWZ6783
NSP	1..MR FUKUGOU BOARD ASSY	AWV2040
	2..FRONT ASSY	AWZ6832
	2..LED ASSY	AWZ6816
	1..MR MAIN BOARD ASSY	AWV2041
	1..PC CARD MODULE	AXY1073
⚠	1..POWER SUPPLY UNIT	AXY1065

A MR MAIN BOARD ASSY

[MICHAEL BLOCK]

SEMICONDUCTORS

Mark	No. Description	Part No.
	IC6107,IC6255	PD0278A
	IC6101	TC7W126FU
	Q6108,Q6258	2SA1586
	Q6101,Q6102,Q6251,Q6252	HN1A01FU
	Q6106,Q6107,Q6256,Q6257	HN1B04FU

COILS AND FILTERS

Mark	No. Description	Part No.
	F6101,F6103,F6105,F6251,F6253 EMI FILTER	ATF1194
	L6107,L6257	LCTAW220J2520
	L6101,L6103,L6105,L6106,L6251	LCTAW6R8J2520
	L6253,L6255,L6256	LCTAW6R8J2520

CAPACITORS

Mark	No. Description	Part No.
	C6188,C6327	ACH1357
	C6186 (100uF/6.3V)	ACH1364
	C6182,C6251,C6321 (100uF/6.3V)	ACH1396
	C6126,C6142,C6163,C6164	CCSRCH330J50
	C6171,C6172,C6272,C6288	CCSRCH330J50
	C6305,C6306,C6312,C6313	CCSRCH330J50
	C6127,C6143,C6273,C6289	CCSRCH680J50
	C6151,C6297	CKSQYB225K10
	C6112,C6114,C6258,C6260	CKSRYB102K50
	C6119,C6136,C6153,C6154,C6168	CKSRYB104K16
	C6177,C6185,C6265,C6282	CKSRYB104K16
	C6299,C6300,C6309,C6316,C6324	CKSRYB104K16
	C6101,C6155,C6169,C6175,C6190	CKSRYB105K10
	C6201,C6295,C6301,C6310,C6314	CKSRYB105K10
	C6103,C6104,C6107-C6111,C6113	CKSSYF104Z16
	C6116,C6123-C6125,C6130-C6133	CKSSYF104Z16
	C6140,C6141,C6146-C6148,C6150	CKSSYF104Z16
	C6152,C6160-C6162,C6165-C6167	CKSSYF104Z16
	C6170,C6176,C6178-C6181	CKSSYF104Z16
	C6253-C6257,C6259,C6262	CKSSYF104Z16
	C6269-C6271,C6276-C6279	CKSSYF104Z16
	C6286,C6287,C6292-C6294,C6296	CKSSYF104Z16
	C6298,C6302-C6304,C6307,C6308	CKSSYF104Z16
	C6311,C6315,C6317-C6320,C6331	CKSSYF104Z16
	C6102 (10uF/16V)	DCH1165

RESISTORS

Mark	No. Description	Part No.
	R6101,R6104-R6106,R6120	RAB4CQ100J
	R6124,R6125,R6251-R6254,R6271	RAB4CQ100J
	R6275,R6276	RAB4CQ100J
	R6329-R6331	RAB4CQ103J
	R6194-R6196,R6321-R6323	RS1/16S1000F
	R6147,R6291	RS1/16S1301F
	R6126,R6138,R6277,R6288	RS1/16S2701F
	R6167,R6168,R6306,R6307	RS1/16S8201F
	R6102,R6103,R6107-R6111,R6114	RS1/16SS###J
	R6121,R6127,R6130,R6136,R6137	RS1/16SS###J
	R6139,R6142-R6145,R6164,R6173	RS1/16SS###J
	R6179,R6188,R6190,R6191,R6193	RS1/16SS###J
	R6199,R6209,R6255-R6262,R6265	RS1/16SS###J
	R6272,R6278,R6279,R6282,R6304	RS1/16SS###J
	R6312,R6316,R6319,R6324,R6325	RS1/16SS###J
	R6328,R6338,R6339	RS1/16SS###J
	Other Resistors	RS1/16S###J

OTHERS

Mark	No. Description	Part No.
	X6101 CRYSTAL OSCILLATOR (27MHz)	ASS1175

[AD BLOCK]

SEMICONDUCTORS

Mark	No. Description	Part No.
	IC6402,IC6602	AD9883AKST-110
	IC6404,IC6604	BA7078AF
	IC6401,IC6601	SM5301BS
	IC6405,IC6408,IC6603,IC6607	TC74VHC126FT
	Q6402,Q6405,Q6602,Q6605	HN1B04FU
	Q6401,Q6601	RN1303

Mark	No.	Description	Part No.

COILS AND FILTERS

Mark	No.	Description	Part No.
	F6401,F6601	EMI FILTER	ATF1194

CAPACITORS

Mark	No.	Description	Part No.
	C6445,C6644		CCSRCH221J50
	C6438,C6638		CKSRYB103K50
	C6404,C6424,C6604,C6624		CKSRYB104K16
	C6408,C6411,C6412,C6431		CKSRYB105K10
	C6434,C6435,C6608,C6611,C6612		CKSRYB105K10
	C6631,C6633,C6634		CKSRYB105K10
	C6421,C6621		CKSRYB105K6R3
	C6442,C6641		CKSRYB223K50
	C6409,C6414,C6423,C6609,C6614		CKSRYB473K16
	C6623		CKSRYB473K16
	C6443,C6642		CKSRYB474K10
	C6402,C6602		CKSRYB822K50
	C6401,C6601		CKSRYB823K16
	C6405-C6407,C6410,C6413		CKSSYF104Z16
	C6415-C6420,C6425,C6427-C6429		CKSSYF104Z16
	C6439,C6440,C6444,C6448		CKSSYF104Z16
	C6605-C6607,C6610,C6613		CKSSYF104Z16
	C6615-C6620,C6625,C6627-C6629		CKSSYF104Z16
	C6639,C6643,C6645,C6647		CKSSYF104Z16
	C6422,C6441,C6622,C6640	(10uF/16V)	DCH1165

RESISTORS

Mark	No.	Description	Part No.
	R6482,R6489,R6681,R6685		RAB4CQ101J
	R6405,R6410,R6418,R6424		RAB4CQ330J
	R6438,R6439,R6608,R6613,R6621		RAB4CQ330J
	R6627,R6643,R6644		RAB4CQ330J
	R6409,R6416,R6417,R6612		RS1/16S1000F
	R6619,R6620		RS1/16S1000F
	R6422,R6625		RS1/16S1101F
	R6404,R6408,R6423,R6607,R6611		RS1/16S1500F
	R6626		RS1/16S1500F
	R6401,R6601		RS1/16S2701F
	R6406,R6413,R6414,R6426,R6428		RS1/16S###J
	R6429,R6465,R6472,R6478,R6479		RS1/16S###J
	R6609,R6610,R6617,R6629,R6631		RS1/16S###J
	R6632,R6666,R6673,R6679,R6680		RS1/16S###J
	Other Resistors		RS1/16SS###J

[HDMI RX BLOCK]

SEMICONDUCTORS

Mark	No.	Description	Part No.
	IC6880		24LC02B(I)SN
	IC6803		PCM1742KE
	IC6881		SII9993CTG100
	IC6806		TC74HC4538AFT
	Q6884		RN1303
	Q6881		RN1902
	Q6880		SM6K2
	D6880,D6881		1SS302
	D6806,D6807,D6884		DAN202U
	D6883		UDZS6.8B

COILS AND FILTERS

Mark	No.	Description	Part No.
	F6881,F6882	EMI FILTER	ATF1194

CAPACITORS

Mark	No.	Description	Part No.
	C6911	(22uF/6.3V)	ACH1362
	C6921,C6922	(100uF/6.3V)	ACH1364
	C6880,C6882,C6884,C6886		CCSRCH101J50
	C6888,C6889,C6892,C6895,C6896		CCSRCH101J50
	C6899-C6902,C6905,C6906,C6915		CCSRCH101J50
	C6917,C6919		CCSRCH101J50
⚠	C6927,C6928		CCSRCH221J50
	C6913		CKSRYF103Z50
	C6920		CKSRYF473Z50
	C6831,C6848,C6881,C6883,C6885		CKSSYF104Z16
	C6887,C6890,C6891,C6893,C6894		CKSSYF104Z16
	C6897,C6898,C6903,C6904		CKSSYF104Z16
	C6907-C6910,C6912,C6916,C6918		CKSSYF104Z16
	C6923-C6926		CKSSYF104Z16
	C6802,C6849,C6851,C6914	(10uF/16V)	DCH1165

RESISTORS

Mark	No.	Description	Part No.
	R6826,R6881-R6883,R6885,R6892		RAB4CQ101J
	R6896,R6901,R6904		RAB4CQ101J
	R6914		RS1/16S1500F
	R6889		RS1/16S3900F
	R6915		RS1/16S3901F
	R6917-R6922		RS1/16S75R0F
	R6872		RS1/16S###J
	Other Resistors		RS1/16SS###J

OTHERS

Mark	No.	Description	Part No.
	JA6881	HDMI CONNECTOR	AKP1232

[ROZ BLOCK]

SEMICONDUCTORS

Mark	No.	Description	Part No.
	IC6951		PD6435A

CAPACITORS

Mark	No.	Description	Part No.
	C6951	(100uF/6.3V)	ACH1364
	C6959,C6960		CCSRCH150J50
	C6952-C6954,C6956-C6958		CKSSYF104Z16
	C6961,C6962,C6964-C6968		CKSSYF104Z16

RESISTORS

Mark	No.	Description	Part No.
	R6951-R6953,R6956-R6962,R6966		RAB4CQ100J
	R6968,R6972		RAB4CQ100J
	R6945,R6946,R6988		RAB4CQ103J
	Other Resistors		RS1/16SS###J

OTHERS

Mark	No.	Description	Part No.
	X6951	CERAMIC RESONATOR	ASS1169

[CELIA BLOCK]

SEMICONDUCTORS

Mark	No.	Description	Part No.
	IC7001,IC7002		HY57V643220CT-7
	IC7004		PE5362A
	IC7003		TC74LCX125FT

COILS AND FILTERS

Mark	No.	Description	Part No.
	F7001,F7002	EMI FILTER	ATF1194

CAPACITORS

Mark	No.	Description	Part No.
	C7029,C7041	(100uF/6.3V)	ACH1364
	C7064		CCSRCH100D50
⚠	C7025,C7066,C7067		CCSRCH221J50
	C7001-C7024,C7026-C7028		CKSSYF104Z16
	C7032-C7040,C7042-C7063		CKSSYF104Z16
	C7031	(10uF/16V)	DCH1165

Mark	No.	Description	Part No.
	RESISTORS		
	R7013-R7018		RAB4CQ220J
	Other Resistors		RS1/16SS###J
	OTHERS		
	X7001	CRYSTAL OSCILLATOR (85MHz)	ASS1174
	[MIKE BLOCK]		
	SEMICONDUCTORS		
	IC7152		MBM29PL3200BE70PFV
	IC7101		PD5855A
	COILS AND FILTERS		
	F7101,F7102	EMI FILTER	ATF1194
	CAPACITORS		
	C7103,C7120 (100uF/6.3V)		ACH1364
	C7101,C7102,C7104-C7119		CKSSYF104Z16
	C7121-C7135,C7158,C7160-C7162		CKSSYF104Z16
	RESISTORS		
	R7113,R7115,R7119,R7121		RAB4CQ101J
	R7123,R7124		RAB4CQ101J
	R7102,R7105-R7108,R7110,R7111		RAB4CQ330J
	Other Resistors		RS1/16SS###J
	[MAIN UCOM BLOCK]		
	SEMICONDUCTORS		
	IC7205		24LC128(I)SN
	IC7207		MB91F355APMTGE1
	IC7210		PST3612UR
	IC7203,IC7206		PST3628UR
	IC7209		TC74VHC08FT
	IC7202		TC74VHC125FT
	Q7201		2SJ461A
	D7201		1SS355
	CAPACITORS		
	C7205 (100uF/6.3V)		ACH1364
⚠	C7241-C7243,C7245		CCSRCH221J50
	C7213,C7218		CCSRCH7R0D50
	C7201		CKSRYB103K50
	C7226,C7237		CKSRYB104K16
	C7216		CKSRYB472K50
	C7217		CKSRYF103Z50
	C7209-C7212,C7214,C7215,C7219		CKSSYF104Z16
	C7221-C7225,C7227-C7229		CKSSYF104Z16
	C7232-C7234,C7238,C7240		CKSSYF104Z16
	RESISTORS		
	R7221,R7229,R7241,R7248-R7250		RAB4CQ101J
	R7201		RAB4CQ472J
	R7224,R7227,R7252		RS1/16S###J
	Other Resistors		RS1/16SS###J
	OTHERS		
	CN7203	3P CONNECTER	AKM1213
	CN7201	PLUG 8-P	AKM1225
	CN7202	CONNECTOR	AKM1242
	X7201	CERAMIC RESONATOR	ASS1170
	[MR IF BLOCK]		
	SEMICONDUCTORS		

Mark	No.	Description	Part No.
	IC7456		PQ015YZ01ZP
	IC7454		PQ050DZ01ZPH
	IC7453		PQ3DZ13
	IC7401		SII170BCLG64
	IC7404		TC74VCX08FT
	IC7403		TC74VCX574FT
	IC7451		TC74VHC08FT
	Q7406		2SA1586
	Q7405		HN1C01FU
	Q7403,Q7407,Q7408		RN1303
	Q7451		RN1901
	Q7401		RN1902
	Q7404		RN2901
	D7401-D7406,D7457		1SS355
	COILS AND FILTERS		
	F7401-F7404	EMI FILTER	ATF1194
	L7401 (3.3uH)		ATH1132
	CAPACITORS		
	C7474 (330uF/6.3V)		ACH1365
	C7456,C7460,C7465,C7468 (100uF/6.3V)		ACH1396
	C7401,C7402		CCSRCH100D50
	C7475,C7477		CCSRCH221J50
	C7403,C7404,C7406,C7407		CCSRCH820J50
	C7410,C7411,C7413,C7414,C7419		CCSRCH820J50
	C7405,C7412,C7415,C7417,C7418		CKSSYF104Z16
	C7420,C7423,C7451,C7452		CKSSYF104Z16
	C7454,C7455,C7458,C7459		CKSSYF104Z16
	C7466,C7467,C7469,C7473,C7476		CKSSYF104Z16
	C7416,C7421,C7424,C7457 (10uF/16V)		DCH1165
	RESISTORS		
	R7425,R7449-R7452,R7454		RAB4CQ101J
	R7496-R7499		RAB4CQ101J
	R7453		RAB4CQ103J
	R7394		RS1/16S1001F
	R7395,R7410		RS1/16S5100F
	R7456		RS2LMFR82J
	R7428-R7431		RS1/16S###J
	Other Resistors		RS1/16SS###J
	OTHERS		
	CN7454,CN7455	50P CONNECTER	AKM1201
	CN7453	PLUG 15-P	AKM1232
	CN7402	16P FFC CONNECTOR	AKM1234
	CN7451	CONNECTOR	AKM1269
	[REGULATOR BLOCK]		
	SEMICONDUCTORS		
	IC7302		M5291FP
	IC7151		MBM29PL3200BE70PFV
	IC7301		NJM12904V
	IC7452		TC74VHC126FT
	Q6104,Q6105,Q6109,Q6253-Q6255		2SA1586
	Q7303		2SA1586
	Q7302		2SD1664
	Q7301		HN1C01FU
	Q7304		RN1303
	Q7305		TPC6104
	D7302		1SS355
	D7301		D1FL20U(S)

COILS AND FILTERS

Mark	No. Description	Part No.
	F7405-F7408	ATF1209
	L7301	ATH1127

CAPACITORS

Mark	No. Description	Part No.
	C7483 (330uF/6.3V)	ACH1365
	C7304 (100uF/16V)	ACH1394
⚠	C7244	CCSRCH100D50
	C7301	CCSRCH102J50
⚠	C6927,C6928,C7241-C7243,C7245	CCSRCH221J50
⚠	C7478-C7482	CCSRCH221J50
	C7303	CCSRCH681J50
	C6149,C6187,C6189,C6322,C6323	CKSSYF104Z16
	C6325,C7153,C7155-C7157,C7471	CKSSYF104Z16
	C7302,C7453 (10uF/16V)	DCH1165

RESISTORS

Mark	No. Description	Part No.
	R6332-R6334	RAB4CQ0R0J
	R7470,R7477	RAB4CQ101J
	R6834,R6836,R6944,R6947-R6950	RAB4CQ103J
	R6835,R6839,R6937,R6938	RAB4CQ470J
	R7319	RS1/10S0R0J
	R7320-R7323	RS1/10S1R2J
	R7318	RS1/10S681J
	R7312	RS1/16S1101F
	R7316	RS1/16S1201F
	R7309	RS1/16S1501F
	R7315	RS1/16S3901F
	R7317	RS1/16S8201F
	R7459	RS2LMF3R9J
	Other Resistors	RS1/16SS###J

OTHERS

Mark	No. Description	Part No.
	CN7301 CONNECTOR	AKM1242
	CN7401 DVI SOCKET (24P)	AKP1250

B AV BOARD ASSY

[TUNER BLOCK]

SEMICONDUCTORS

Mark	No. Description	Part No.
	IC7502	MSP3417G
	IC7504	PST9246N
	IC7501	TDA9818TS
	Q7503,Q7504,Q7506,Q7513,Q7522	2SA1586
	Q7524,Q7527,Q7528	2SA1586
	Q7511,Q7517	2SC4082
	Q7501,Q7502,Q7509,Q7512,Q7514	2SC4116
	Q7518-Q7521,Q7525,Q7526,Q7530	2SC4116
	Q7533-Q7536	2SC4116
	Q7516	2SC4213
	Q7505	RN1303
	D7504	1SS355
	D7502,D7503	1SS356
	D7501	UDZS33B

COILS AND FILTERS

Mark	No. Description	Part No.
	F7510 BGS TRAP FILTER	ATF1210
	L7501	LCTAW100J2520
	L7512,L7513	LCTAW150J2520
	L7514	LCTAW4R7J2520
	L7511	LCTAW8R2J2520
	L7516,L7519	LCTAWR22J2520
	L7505,L7507	LCTAWR68J2520
	F7506 SAW FILTER	VTF1177
	F7503 SAW FILTER	VTF1179
	F7504 IF TRAP FILTER	VTF1180
	F7505 IF TRAP FILTER	VTF1181
	F7501 TRAP FILTER	VTF1183
	L7504 VCO COIL	VTL1164

CAPACITORS

Mark	No. Description	Part No.
	C7507 (220uF/10V)	ACH1368
	C7552 (3.3uF/50V)	ACH1385
	C7542 (47uF/16V)	ACH1391
	C7509,C7525,C7549,C7591,C7599 (100uF/16V)	ACH1394
	C7596 (33uF/10V)	ACH1398
	C7501 (10uF/50V)	ACH1402
	C7564,C7573,C7581	CCSRCH102J50
	C7515	CCSRCH120J50
	C7568	CCSRCH121J50
	C7578	CCSRCH181J50
	C7532,C7598	CCSRCH330J50
	C7567	CCSRCH470J50
	C7556,C7558	CCSRCH560J50
	C7576	CCSRCH680J50
	C7569,C7570	CCSRCJ3R0C50
	C7537,C7539	CKSQYB225K10
	C7502,C7520,C7522,C7523	CKSRYB102K50
	C7534,C7535,C7579,C7580	CKSRYB102K50
	C7514,C7524,C7528,C7536,C7545	CKSRYB103K50
	C7554,C7572,C7584	CKSRYB103K50
	C7541	CKSRYB104K16
	C7503	CKSRYB105K10
	C7559,C7561,C7588	CKSRYB152K50
	C7590	CKSRYB221K50
	C7504,C7505,C7526	CKSRYB222K50
	C7540	CKSRYB224K10
	C7518	CKSRYB332K50
	C7557,C7560,C7583,C7589	CKSRYB471K50
	C7563,C7571	CKSRYB472K50
	C7582	CKSRYF103Z50
	C7575	CKSRYF104Z16
	C7506,C7510,C7513,C7527,C7531	CKSRYF104Z50
	C7547,C7550,C7551,C7555,C7577	CKSRYF104Z50
	C7511,C7546,C7548,C7553,C7562	DCH1165
	C7587 (10uF/16V)	DCH1165

RESISTORS

Mark	No. Description	Part No.
	R7568	RD1/2LMF100J
	R7633	RS1/16S1601F
	R7524	RS1/16S2203F
	R7554	RS1/16S2700F
	R7544,R7552	RS1/16S2702F
	R7504	RS1/16S3302F
	R7655,R7656	RS1/16S5600F
	R7555	RS1/16S6800F
	VR7504	CCP1390
	VR7502	CCP1398
	Other Resistors	RS1/16S###J

OTHERS

Mark	No. Description	Part No.
	X7501 CERAMIC RESONATOR (18.432 MHz)	VSS1189
⚠	U7501 TV FRONTEND	AXF1119

[AV IO BLOCK]

SEMICONDUCTORS

	IC7701,IC7702	TC74VHC125FT
	Q7706-Q7708,Q7710,Q7716	2SA1586
	Q7723,Q7724,Q7728,Q7740,Q7743	2SA1586
	Q7748,Q7752,Q7753	2SA1586
	Q7702,Q7703,Q7705,Q7712-Q7714	2SC4116
	Q7719,Q7720,Q7722,Q7726,Q7727	2SC4116
	Q7729-Q7731,Q7733,Q7735,Q7737	2SC4116
	Q7739,Q7742,Q7744,Q7746,Q7747	2SC4116
	Q7749-Q7751,Q7758-Q7760	2SC4116
	Q7757	DTA124EUA
	Q7717,Q7718,Q7725,Q7734,Q7736	HN1A01FU
	Q7701,Q7745	HN1C01FU
	Q7715,Q7762	RN1303
	Q7704,Q7711,Q7721,Q7738,Q7761	RN2303
	D7709,D7710,D7715,D7722,D7736	1SS301
	D7705-D7708,D7713,D7714,D7716	1SS302
	D7719,D7720	1SS302
	D7703,D7721	1SS355
	D7701,D7711,D7717	UDZS12B
	D7702,D7712,D7718,D7723-D7735	UDZS9.1B

COILS AND FILTERS

	L7701,L7702,L7705,L7706	LCTAW1R0J2520
	L7709,L7710	LCTAW1R0J2520
	L7703,L7704,L7707,L7708	LCTAW560J2520
	L7711-L7714	LCTAW560J2520

SWITCHES AND RELAYS

	S7701	ASH1046

CAPACITORS

	C7747,C7748 (1.0uF/50V)	ACH1383
	C7767 (22uF/16V)	ACH1400
	C7706,C7709,C7728,C7730,C7743	CEHAT471M10
	C7756	CEHAT471M10
	C7716	CEVWNP470M10
	C7757	CKSRYB103K50
	C7701-C7703,C7714,C7719	CKSRYB105K10
	C7722-C7726,C7729,C7732,C7733	CKSRYB105K10
	C7735,C7736,C7740,C7746,C7749	CKSRYB105K10
	C7752-C7754,C7758,C7760,C7761	CKSRYB105K10
	C7773-C7780	CKSRYB222K50
	C7768	CKSRYB224K10
	C7704,C7705,C7711,C7727,C7731	CKSRYF104Z50
	C7739,C7741,C7744,C7751	CKSRYF104Z50
	C7765,C7766	CKSRYF104Z50
	C7707,C7708,C7712,C7713,C7715	DCH1165
	C7717,C7718,C7720,C7734	DCH1165
	C7737,C7738,C7742,C7745,C7750	DCH1165
	C7755,C7759,C7762-C7764 (10uF/16V)	DCH1165

RESISTORS

	R7708,R7717,R7756,R7757,R7761	RS1/10S151J
	R7777,R7801,R7802,R7809,R7810	RS1/10S151J
	R7820,R7834	RS1/10S151J
	R7841	RS1/16S1001F
	R7842	RS1/16S1501F

Mark	No. Description	Part No.
	Other Resistors	RS1/16S###J

OTHERS

	JA7703 6P PIN JACK	AKB1300
	JA7704 PINJACK+MINI DIN 4P	AKB1307
	JA7705 RGB CONNECTOR	AKB1311
	JA7701 RGB CONNECTOR	AKB1316

[AV SW BLOCK]

SEMICONDUCTORS

	IC8005	AN15852A
	IC8006	BH3540AFS
	IC8007	BH3544F
	IC8002	CXA2069Q
	IC8004	NJM12904V
	IC8003	TC4052BFT
	IC8001	TC7WH123FU
	Q8005-Q8008	2SA1586
	Q8019-Q8022,Q8025-Q8027	2SC4116
	Q8023	DTA124EUA
	Q8024	DTC124EUA
	Q8028	HN1B04FU
	Q8011	HN1C01FU
	D8015-D8017	1SS355
	D8013,D8014	UDZS9.1B

CAPACITORS

	C8075 (47uF/16V)	ACH1391
	C8005,C8006,C8056 (100uF/16V)	ACH1394
	C8064,C8065 (10uF/16V)	ACH1399
	C8014 (22uF/16V)	ACH1400
	C8022,C8027	CCSRCH181J50
	C8057	CCSRCH270J50
	C8019,C8038	CCSRCH681J50
	C8002-C8004,C8008,C8009,C8016	CKSRYB105K10
	C8050,C8063,C8066,C8069,C8070	CKSRYB105K10
	C8072-C8074	CKSRYB105K10
	C8071,C8076,C8077	CKSRYB471K50
	C8001,C8013,C8015,C8025,C8026	CKSRYF104Z50
	C8031-C8036,C8039,C8042-C8044	CKSRYF104Z50
	C8048,C8049,C8052,C8053,C8055	CKSRYF104Z50
	C8059	CKSRYF104Z50
	C8010,C8012,C8018,C8023,C8024	DCH1165
	C8028,C8037,C8040,C8041	DCH1165
	C8045-C8047,C8051,C8060,C8061 (10uF/16V)	DCH1165

RESISTORS

	R8125,R8127	RD1/2LMF120J
	Other Resistors	RS1/16S###J

[AV REG BLOCK]

SEMICONDUCTORS

	IC8505,IC8506	PQ05DZ11
	IC8504	PQ09DZ11
	Q8509,Q8514	RN1303
	Q8512	RN2303
	Q8510	SM6K2
	Q8511	TPC8003
	D8509-D8511	1SS355

COILS AND FILTERS

Mark No. Description	Part No.
F8501-F8504,F8506,F8508,F8510 EMI FILTER	ATF1194

CAPACITORS

C8517,C8523 (100uF/6.3V)	ACH1364
C8510,C8515,C8521 (22uF/16V)	ACH1370
C8512 (100uF/16V)	ACH1394
C8511,C8513,C8516,C8518,C8522	CKSRYB103K50
C8524,C8530	CKSRYB103K50

RESISTORS

R8528,R8531	RS1LMF1R0J
R8525	RS1LMF3R3J
R8554	RS3LMF121J
Other Resistors	RS1/16S###J

OTHERS

CN8503,CN8504 PLUG 14-P	AKM1237

[BOARD IF BLOCK]

CAPACITORS

C8653-C8655	DCH1165

RESISTORS

All Resistors	RS1/16S###J

OTHERS

CN8652-CN8654 50P CONNECTER	AKM1201
CN8658,CN8660 12P FFC CONNECTOR	AKM1233

[UIF UCOM BLOCK]

SEMICONDUCTORS

IC8705	24LC01B
IC8702	HD64F3687FP
IC8703	PST9231N
IC8701	TC74VHC08FT
IC8704	TC7W126FU
Q8701	2SJ461A
Q8702	RN1303
Q8708	RN2303

CAPACITORS

C8711 (100uF/16V)	ACH1394
C8706,C8707	CCSRCH120J50
C8709	CKSRYB472K50
C8701-C8705,C8708,C8712,C8713	CKSRYF104Z50
C8716 (10uF/16V)	DCH1165

RESISTORS

R8719	RAB4C101J
R8702,R8704,R8720,R8745	RAB4C103J
Other Resistors	RS1/16S###J

OTHERS

CN8701 PLUG 8-P	AKM1225
X8702 CERAMIC RESONATOR	ASS1168
X8701 CRYSTAL OSCILLATOR (32.768kHz)	ASS1172

[TELETEXT BLOCK]

SEMICONDUCTORS

Mark No. Description	Part No.
IC8903	NJM2233BM
IC8901	PST9230N
IC8904	SDA6000
IC8906	TA1287FG
IC8905	TC74VHC08FT
IC8907	TC7SH04FU
IC8902	TC7W126FU
Q8901,Q8904-Q8906	2SA1586
Q8903,Q8909	2SC4116
Q8902,Q8910	RN1303
Q8907,Q8908	RN1902
D8902	UDZS3.0B
D8901	UDZS3.9B

COILS AND FILTERS

L8901	LCTAW270J2520

CAPACITORS

C8906 (100uF/16V)	ACH1394
C8916,C8917	CCSRCH150J50
C8908	CCSRCH181J50
C8904	CKSRYB102K50
C8903	CKSRYB103K50
C8926,C8936-C8938,C8940-C8942	CKSRYB104K16
C8901	CKSRYB471K50
C8902,C8905,C8909-C8911	CKSRYF104Z50
C8914,C8915,C8918-C8920	CKSRYF104Z50
C8923-C8925,C8927-C8935,C8939	CKSRYF104Z50
C8907,C8912,C8913 (10uF/16V)	DCH1165

RESISTORS

R8905-R8907,R8922,R8960,R8991	RAB4C101J
Other Resistors	RS1/16S###J

OTHERS

CN8901 PLUG 8-P	AKM1225
K8904, K8905 TEST PIN	AKX9002
X8901 CRYSTAL OSCILLATOR	ASS1180

[MEMORY SW BLOCK]

SEMICONDUCTORS

IC9104	HY57V641620HGT-H
IC9106,IC9108	TA1287FG
IC9105,IC9107	TC4051BF
Q9103,Q9106	2SA1586
Q9101,Q9105	2SC4116
D9101-D9104	1SS355

CAPACITORS

C9103-C9106,C9111,C9112	CKSRYB104K16
C9121,C9122,C9125-C9127,C9132	CKSRYB104K16
C9117,C9131	CKSRYB474K10
C9101,C9107,C9108,C9110	CKSRYF104Z50
C9113,C9114,C9116,C9118-C9120	CKSRYF104Z50
C9124,C9128-C9130	CKSRYF104Z50

RESISTORS

All Resistors	RS1/16S###J

OTHERS

3401 LABEL(BLUE16)	AAX2787
7701 SHIELD PLATE S	ANG2636
7702 SHIELD PLATE W	ANG2643

C MDR ASSY

SEMICONDUCTORS

Mark	No.	Description	Part No.
	IC9301,IC9302		TC74VHC08FT
	Q9301,Q9302		2SC4116
	Q9303		DTA124EUA

CAPACITORS

Mark	No.	Description	Part No.
	C9304		CCSRCH101J50
	C9301,C9305-C9308		CCSRCH471J50
	C9302,C9303		CKSRYF104Z50

RESISTORS

Mark	No.	Description	Part No.
	All Resistors		RS1/16S###J

OTHERS

Mark	No.	Description	Part No.
	CN9301	SOCKET (20P)	AKP1226
	CN9302	16P CONNECTOR	VKN1220

D SR ASSY

SEMICONDUCTORS

Mark	No.	Description	Part No.
	IC9451		SP3232ECY
	IC9453		TC74VHC00FT
	IC9452		TC74VHC125FT
	Q9455,Q9458		2SA1586
	Q9453		2SC4116
	Q9454,Q9456,Q9457		DTC124EUA
	D9451,D9452,D9459,D9460		1SS355

CAPACITORS

Mark	No.	Description	Part No.
	C9456,C9457 (10uF/16V)		ACH1399
	C9451-C9455,C9459,C9460		CKSRYF104Z16

RESISTORS

Mark	No.	Description	Part No.
	All Resistors		RS1/16S###J

OTHERS

Mark	No.	Description	Part No.
	JA9453	MINI JACK(4P)	AKN1073
	JA9451	9P D-SUB SOCKET	AKP1240
	JA9452	RIMOCON JACK	RKN1004
	CN9452	12P CONNECTOR	VKN1216

E FRONT ASSY

SEMICONDUCTORS

Mark	No.	Description	Part No.
	IC9501		24LCS21A
	IC9602		MM1522XU
	IC9601		NJM12904V
	IC9502		TC74VHC08FT
	Q9501,Q9502		DTC124EUA
	D9503		1SS301
	D9506-D9508		1SS302
	D9501,D9502,D9504,D9505		UDZS5.6B
	D9512,D9513		UDZS5.6B
	D9509-D9511		UDZS9.1B

COILS AND FILTERS

Mark	No.	Description	Part No.
	L9503-L9506		LCTAW1R0J2520
	L9501,L9502		LCTAW560J2520

CAPACITORS

Mark	No.	Description	Part No.
	C9520-C9522		ACH1357
	C9605 (47uF/16V)		ACH1391
	C9517,C9518		CCSRCH220J50
	C9501,C9502		CEHAT471M10
	C9505,C9506,C9531-C9533		CKSRYB103K50
	C9504,C9514		CKSRYB104K16
	C9507-C9512		CKSRYB105K10
	C9503		CKSRYB473K16
	C9516,C9519,C9602,C9606		CKSRYF104Z16
	C9513,C9515,C9523		DCH1165

RESISTORS

Mark	No.	Description	Part No.
	R9602		RS1/16S1001F
	R9504,R9507,R9508,R9534-R9536		RS1/16S75R0F
	Other Resistors		RS1/16S###J

OTHERS

Mark	No.	Description	Part No.
	JA9501	PIN JACK(3P)	AKB1303
	CN9502	50P CONNECTER	AKM1201
	CN9503	MINI JACK	AKN1028
	JA9502	4P MINIDIN SOCKET(S)	AKP1238
	JA9505	15P D-SUB SOCKET	AKP1241
	JA9503	RIMOCON JACK	RKN1026
	9501	F GROUNDIG PLATE	ANG2657

F LED ASSY

SEMICONDUCTORS

Mark	No.	Description	Part No.
	Q9652		RN2902
	D9654		SML-310MT
	D9653		SML-311UT

CAPACITORS

Mark	No.	Description	Part No.
	C9651		CKSRYB103K50

RESISTORS

Mark	No.	Description	Part No.
	All Resistors		RS1/16S###J

OTHERS

Mark	No.	Description	Part No.
	CN9651	PH CONNECTOR	S7B-PH-SM3

G REG ASSY

SEMICONDUCTORS

Mark	No.	Description	Part No.
	IC8509		BD6522F
	IC8501,IC8503		M5291FP
	IC8508		PQ025EZ01ZP
	IC8507		PQ033EZ01ZP
	Q8507		2SC4116
	Q8504,Q8508		HN1C01FU
	Q8515		RN1303
	Q8503,Q8513		RN2303
	Q8516		TPC8003
	D8501,D8504,D8506,D8508		1SS355
	D8512,D8513		1SS355
	D8507		HZU2.2B
	D8502		UDZS5.1B

COILS AND FILTERS

Mark	No.	Description	Part No.
	F8511	EMI FILTER	ATF1194
	L8501,L8502	INDUCTOR	ATH1126

CAPACITORS

Mark	No.	Description	Part No.
	C8536	(47uF/16V)	ACH1391
	C8501,C8503,C8528,C8533	(100uF/6.3V)	ACH1396
	C8507,C8526,C8531	(22uF/16V)	ACH1400
	C8504,C8519		CCSRCH221J50
	C8520		CEAT101M50
	C8537,C8543,C8545		CEHAZL471M16
	C8527,C8529,C8532,C8534,C8540		CKSRYB103K50
	C8542,C8546,C8547		CKSRYB103K50
	C8502,C8514		CKSRYB821K50
	C8506,C8508,C8525		CKSRYF104Z16
	C8505,C8538,C8539,C8541,C8544		DCH1165

RESISTORS

Mark	No.	Description	Part No.
	R8502,R8508		ACN1164
	R8506,R8510,R8511,R8522,R8530		ACN1188
	R8533-R8535		ACN1188
	R8503		RS1/16S1001F
	R8509		RS1/16S1101F
	R8504		RS1/16S3301F
	R8520		RS1/16S3302F
	R8543,R8545		RS1LMF1R0J
	Other Resistors		RS1/16S###J

OTHERS

Mark	No.	Description	Part No.
	CN8505,CN8506	SOCKET 14-P	AKP1247
	CN8651	PLUG(15P)	KM200NA15
	U8502	DD CON UNIT	AXY1066
	U8510	DD CON UNIT	AXY1070

H AC SW ASSY

SWITCHES AND RELAYS

Mark	No.	Description	Part No.
⚠	S9341		ASG1093

OTHERS

Mark	No.	Description	Part No.
	CN9341	2P-SIDE VA-CONNECTOR	S2P3-VH

I POWER SUPPLY UNIT

POWER SUPPLY UNIT has no service part.

J PC CARD MODULE

PC CARD MODULE has no service part.

6. ADJUSTMENT

1. At shipment, the unit is adjusted to its best conditions. Normally, it is not necessary to readjust even if an assembly is replaced. If the adjustment is shifted or if it becomes necessary to readjust because of part replacement, etc., perform the adjustment as described below.
2. Any value changed in Service/Factory mode will be stored in memory as soon as it is changed. Before readjustment, take note of the original values for reference in case you need to restore the original settings.
3. Use a stable AC power supply.

6.1 HOW TO ENTER SERVICE FACTORY MODE

■ Refer to the technical document (Service Know-How).

6.2 POSSIBLE CASES WHERE READJUSTMENT IS REQUIRED

■ When any of the following assemblies is replaced

POWER SUPPLY Unit	➡	No adjustment required
AV BOARD Assy	➡	No adjustment required
MR MAIN BOARD Assy	➡	No adjustment required
PC Card Unit	➡	No adjustment required
Other assemblies	➡	No adjustment required

■ When any part in the following assemblies is replaced

POWER SUPPLY Unit	➡	The assembly must be replaced as a unit, and no part replacement is allowed.
AV BOARD Assy	➡	If the front end is replaced, adjustment is required.
MR MAIN BOARD Assy	➡	The assembly must be replaced as a unit, and no part replacement is allowed.
PC CARD Unit	➡	The assembly must be replaced as a unit, and no part replacement is allowed.
Other assemblies	➡	No adjustment required

■ Adjustment items

① AFC Adjustment
② RF-AGC Adjustment
③ L'AFC Adjustment
④ Video Level Adjustment

6.3 USING RS-232C COMMANDS

For the PDP-434HD and -504HD series Plasma Displays, the circuitry is structured as shown in the diagram below to support the SR+ system. Controlling with either the SR+ system or RS-232C commands can be selected. As the SR+ system is selected at shipment, to control with RS-232C commands in servicing it is necessary to switch the paths. After servicing, be sure to return the setting to the SR+ system.

● Rough diagram of switching between SR+ and RS-232C

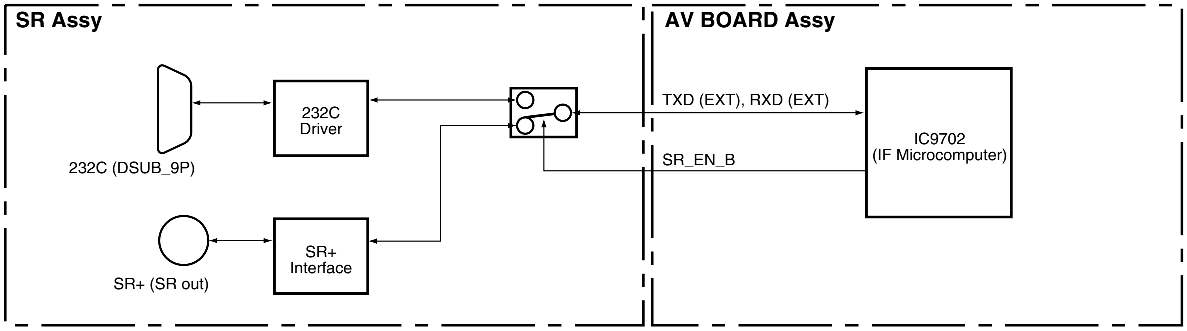
SR Assy
AV BOARD Assy
232C (DSUB_9P)
232C Driver
SR+ (SR out)
SR+ Interface
TXD (EXT), RXD (EXT)
SR_EN_B
IC9702 (IF Microcomputer)

● How to switch from SR+ to RS-232C

Remote control unit SR+ → 232C / 232C → SR+

Enter the Service Factory mode

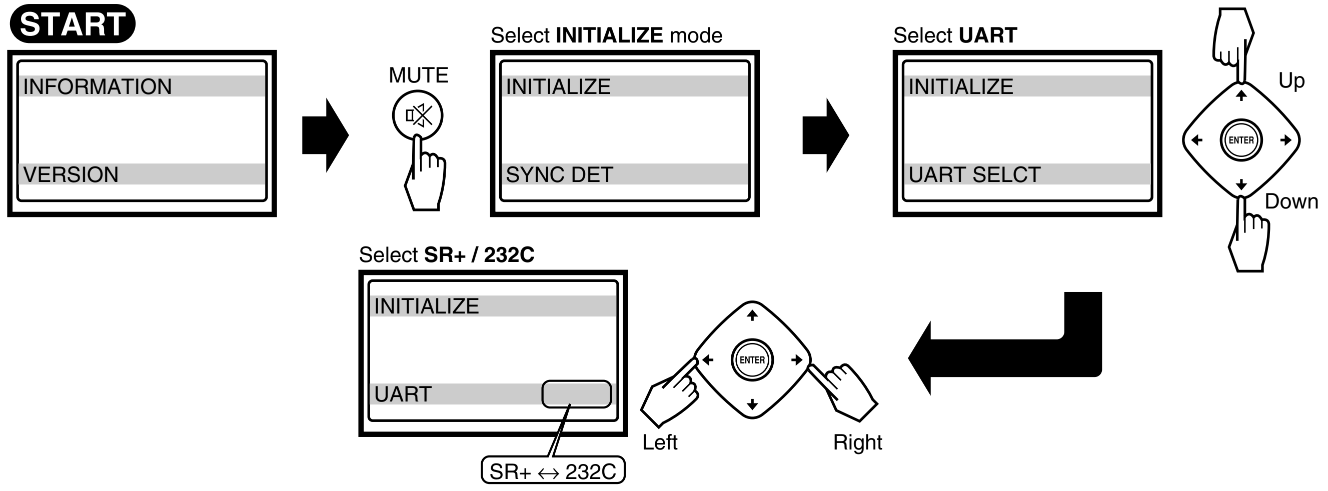
START
INFORMATION
VERSION
MUTE
Select INITIALIZE mode
INITIALIZE
SYNC DET
Select UART
INITIALIZE
UART SELCT
Up
ENTER
Down
Select SR+ / 232C
INITIALIZE
UART
SR+ ↔ 232C
ENTER
Left
Right

Tips: How to change the SR+/RS-232C setting without entering Service Factory mode
Hold the **VOLUME** ⊿+ or ⊿– key on the remote control unit pressed for 3-10 seconds during Standby mode.
Then within 3 seconds after the key is released, hold the **2-screen** ◑ key on the remote control unit pressed for 3-10 seconds.
Then within 3 seconds after the key is released, use the **SET** key on the remote control unit to set to RS-232C (the baud rate last selected is chosen) or the **HOME MENU** key to set to SR+.

PC 232C → SR+ only

Enter the Service Factory mode
(See "6.7 SERVICE FACTORY MODE".)

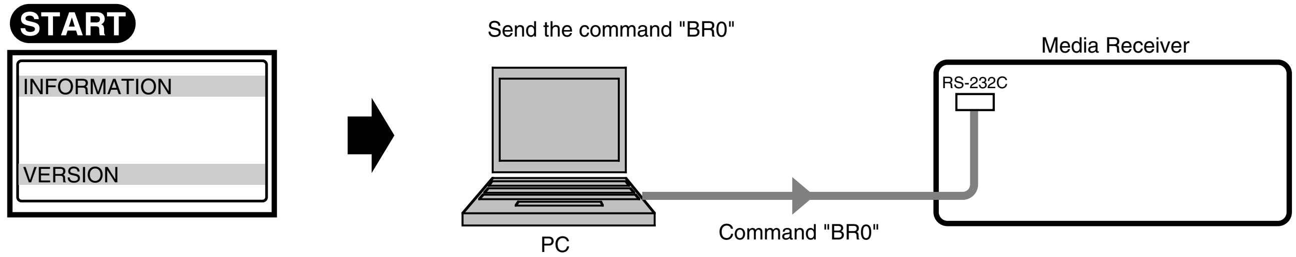
START
INFORMATION
VERSION
Send the command "BR0"
Media Receiver
RS-232C
PC
Command "BR0"

6.4 ADJUSTMENT ITEMS

If readjustment is necessary because of adjustment error at shipment, perform adjustments as shown below.

● Adjustment Points

B AV BOARD ASSY

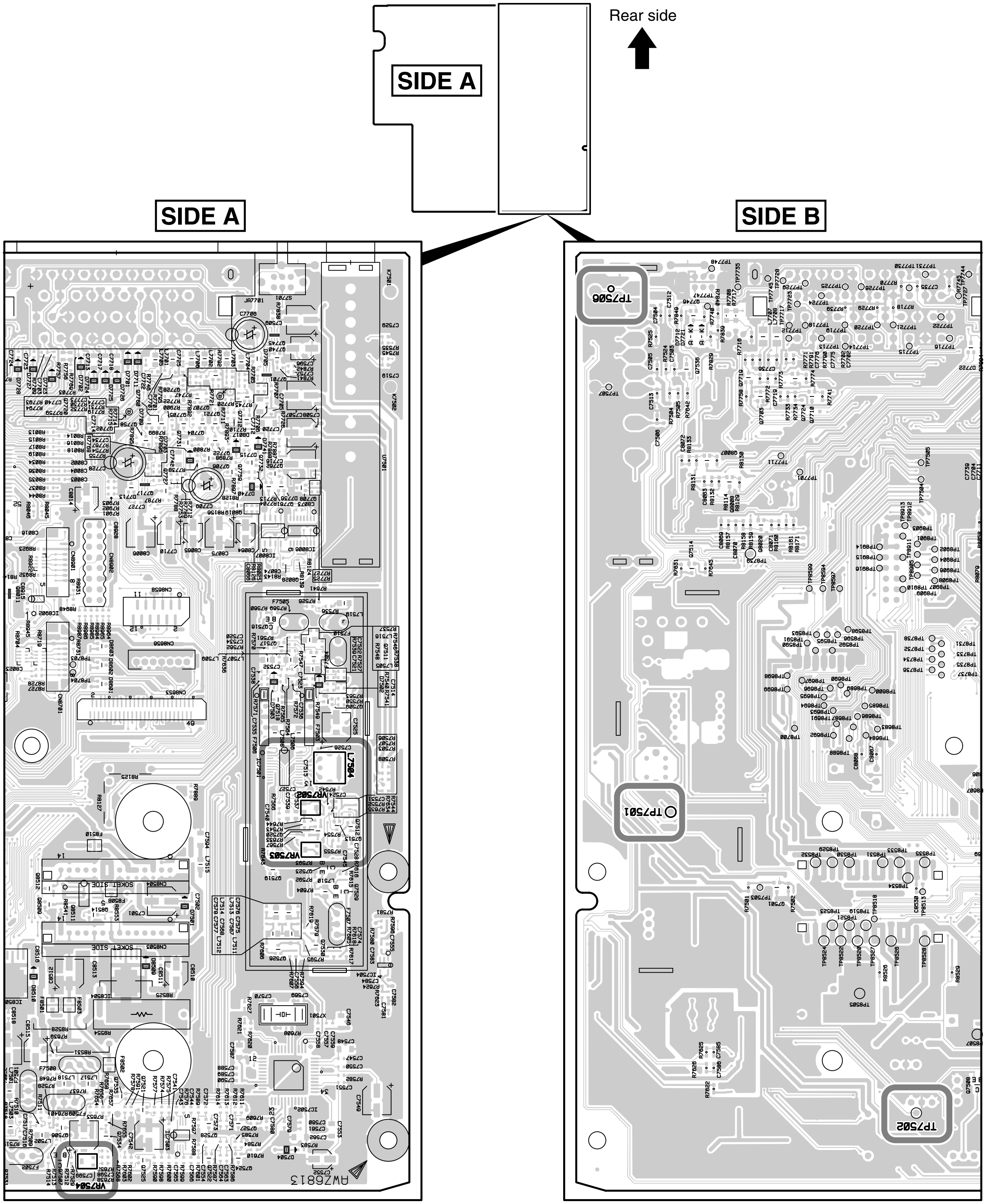
Rear side
SIDE A
SIDE A
SIDE B
L7504
VR7502
VR7503
VR7504
TP7506
TP7501
TP7502
AWZ6813

① AFC Adjustment

Equipment : SG, Digital mutimeter / Tester
Condition : Input RF level 75dBμV
PAL-B/G
White bar 100%

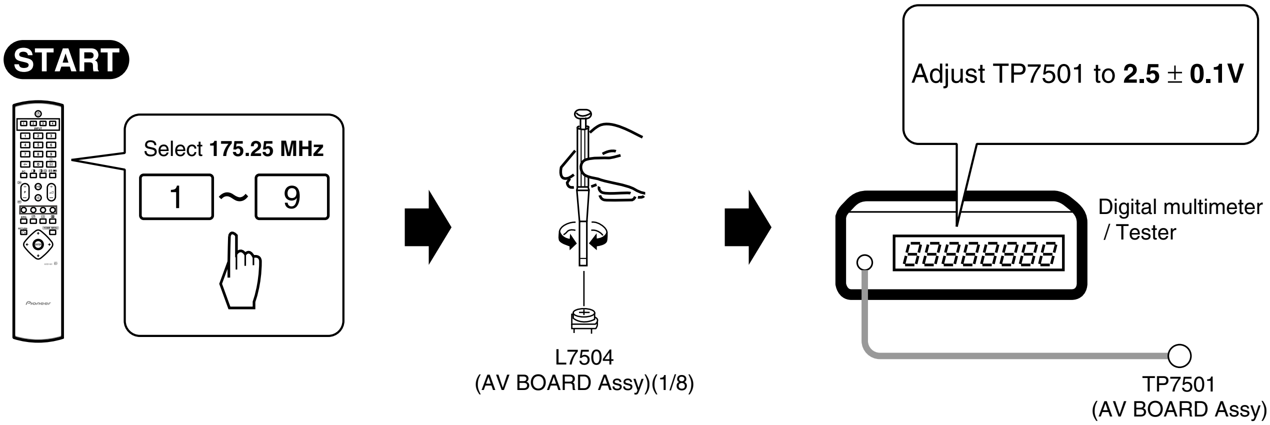
START
1
9
L7504
(AV BOARD Assy)(1/8)
88888888
Digital multimeter / Tester
TP7501
(AV BOARD Assy)

Select **175.25 MHz**

Adjust TP7501 to **2.5** ± **0.1V**

② RF-AGC Adjustment

Equipment : SG, Digital mutimeter / Tester
Condition : Input RF level 68dBμV
PAL-B/G
Multiburst

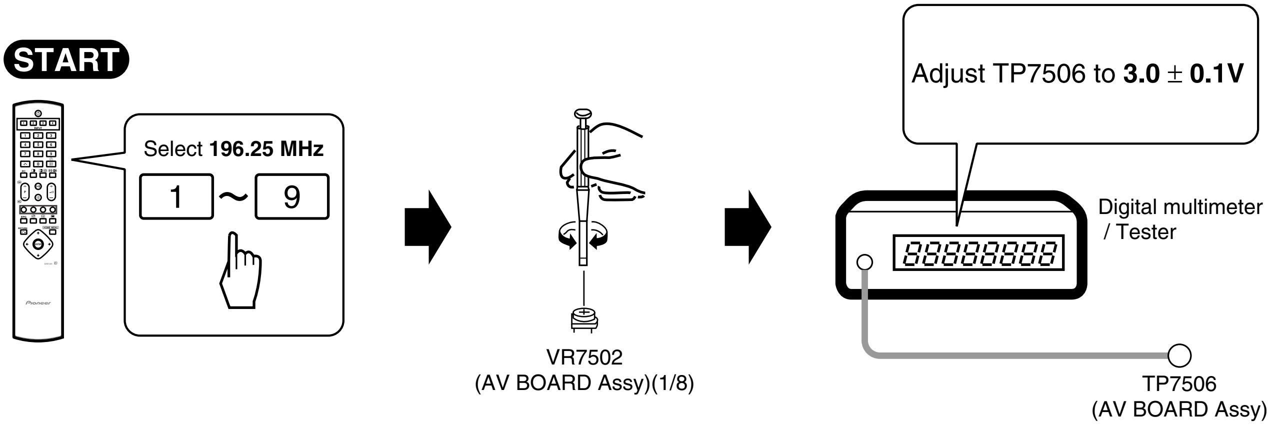
START
1
9
VR7502
(AV BOARD Assy)(1/8)
88888888
Digital multimeter / Tester
TP7506
(AV BOARD Assy)

Select **196.25 MHz**

Adjust TP7506 to **3.0** ± **0.1V**

③ L'AFC Adjustment

Equipment : SG, Digital mutimeter / Tester
Condition : Input RF level 75dBµV
SECAM-L'
Color bar

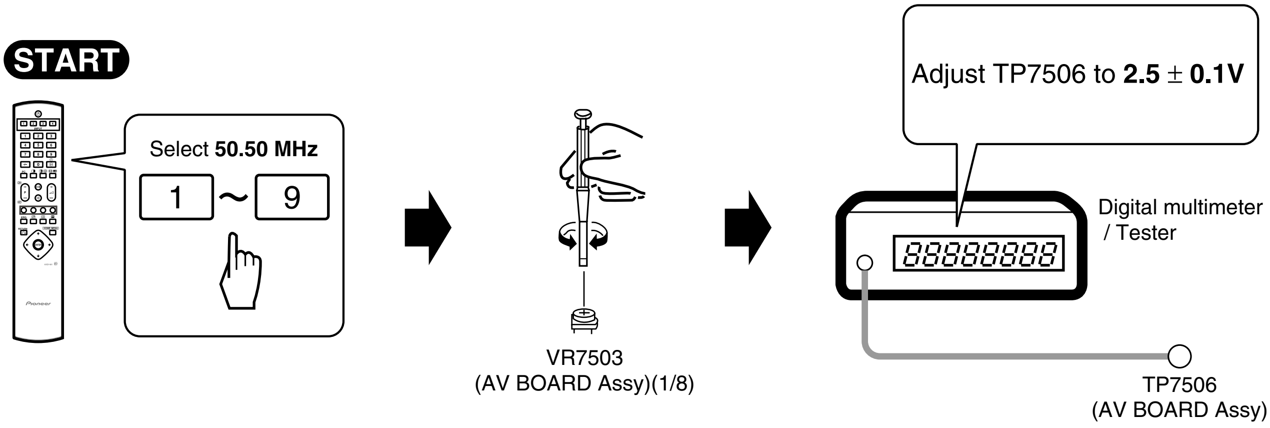
START
1
9
VR7503
(AV BOARD Assy)(1/8)
88888888
Digital multimeter
/ Tester
TP7506
(AV BOARD Assy)

Select **50.50 MHz**

Adjust TP7506 to **2.5** ± **0.1V**

④ Video Level Adjustment

Equipment : SG
Condition : Input RF level 75dBµV
PAL-B/G
White bar 100%

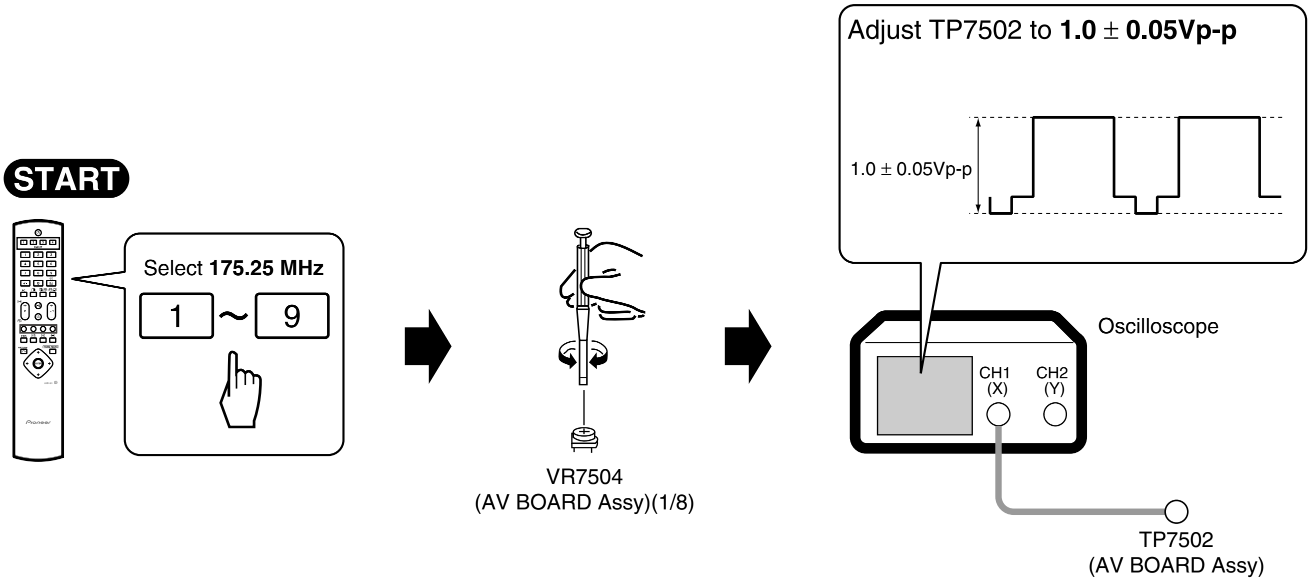
START
1
9
VR7504
(AV BOARD Assy)(1/8)
1.0 ± 0.05Vp-p
Oscilloscope
CH1
(X)
CH2
(Y)
TP7502
(AV BOARD Assy)

Select **175.25 MHz**

Adjust TP7502 to **1.0** ± **0.05Vp-p**

6.5 TRAP SWITCH

● Outline and Notes

For video data transmission from the Media Receiver to the PDP-434HD and PDP-504HD-series Plasma Displays, digital signals are used. Therefore, this unit adopts the HDCP (High-bandwidth Digital Content Protection) system for copyright protection. This unit is also provided with a detection switch (TRAP switch) that will prohibit the unit from being turned on again "if the upper plate of the unit is accidentally opened," in order to prevent the panel technology from being leaked out.

The TRAP switch is disabled while the unit is turned off.
When performing internal diagnosis of the PDP, fix the switch to the OFF position using adhesive tape before turning on the unit. After servicing, be sure to remove the adhesive tape.

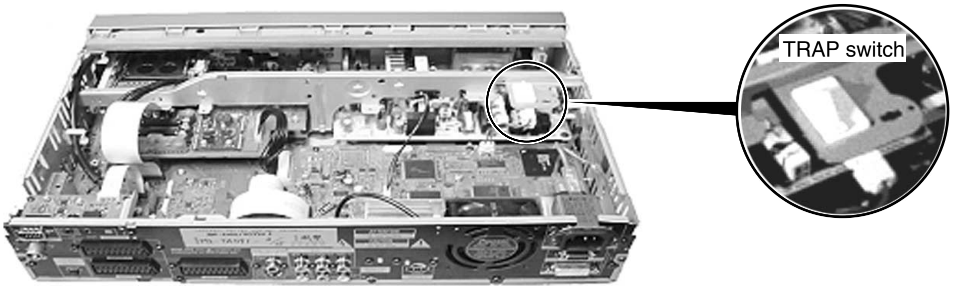

● Rear view

6.6 SERVICING USING ONLY THE MEDIA RECEIVER

For servicing of the PDP-434HD and PDP-504HD-series Plasma Display using only the Media Receiver, the following two methods can be used:

● Remote controlling using SR connections

About connections

- Connect the SR OUT connector of a Pioneer product having that connector (a DVD in the following example) and the SR IN connector of the Media Receiver, using the SR cable. As the remote control sensor is not provided with the Media Receiver, this connection is required for using the remote control unit if the panel is not available. In this case, aim the remote control unit at the remote control sensor of the device (DVD in this case).
- Connect either the audio or the video output of the device (DVD in the example) and the corresponding audio or video input of the Media Receiver, using a cable with phono plugs. This connection is required in order to use ground in common with the SR cable, because with the SR cable connection the ground connection for signal reference is not available. In the example, the audio L channel is used, but the audio R channel or video can be used instead.
- If the plasma display for a previous model, such as the PDP-433P or PDP-503P, is available, servicing while checking displays or using the menus is possible. For this, connect only the DVI connectors (white) of the Media Receiver and the plasma display. The MDR connector of the Media Receiver must not be used, even though it has the same shape and number of pins, because signals assigned to the connectors differ. Using the MDR connector may damage the unit.

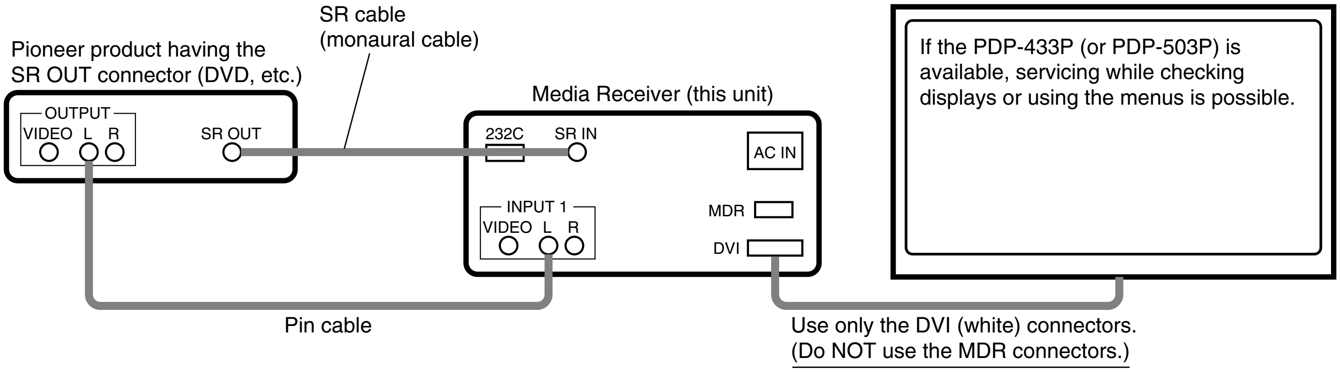
SR cable
(monaural cable)
Pioneer product having the
SR OUT connector (DVD, etc.)
OUTPUT
VIDEO L R
SR OUT
Media Receiver (this unit)
232C
SR IN
AC IN
INPUT 1
VIDEO L R
MDR
DVI
If the PDP-433P (or PDP-503P) is available, servicing while checking displays or using the menus is possible.
Pin cable
Use only the DVI (white) connectors.
(Do NOT use the MDR connectors.)

● RS-232C control using a PC

As the SR+ system is selected at shipment, to use RS-232C control, RS-232C must be selected beforehand using the remote control unit and by making the above connections. For details, see "6.3. USING RS-232C COMMANDS."
For connection with the PC, use a straight cable.

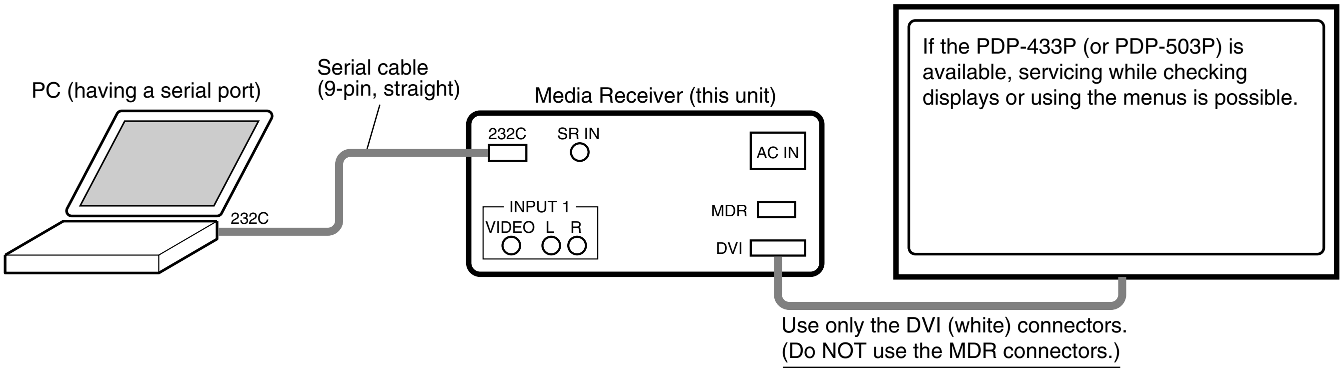
PC (having a serial port)
Serial cable
(9-pin, straight)
232C
Media Receiver (this unit)
232C
SR IN
AC IN
INPUT 1
VIDEO L R
MDR
DVI
If the PDP-433P (or PDP-503P) is available, servicing while checking displays or using the menus is possible.
Use only the DVI (white) connectors.
(Do NOT use the MDR connectors.)

● Note on connection

If the MDR connector of the PDP-434HD or -504HD-series is used, it is considered that the PDP-434P (or -504P) is connected, and the Media Receiver operates on such precondition, **which may result in a failure of the Media Receiver. Be sure not to connect to the MDR connector.** (Do NOT use the MDR connector when servicing the Media Receiver alone.)

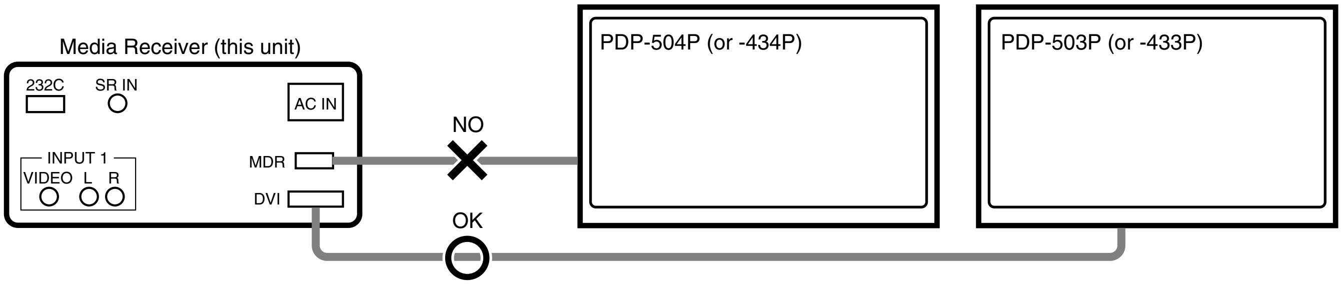
Media Receiver (this unit)
232C
SR IN
AC IN
INPUT 1
VIDEO L R
MDR
DVI
NO
OK
PDP-504P (or -434P)
PDP-503P (or -433P)

6.7 SERVICE FACTORY MODE

To operate in Service Factory mode, use the supplied remote control unit.

■ Operation in Service Factory mode

● Functions whose settings are set to OFF

The settings for the following functions are set to OFF when Service Factory mode is entered (including when the "FAY" command is received):

- Two-screen operations (input function set on the main side is selected)
- P ZOOM
- STILL
- Detection of the TRAP switch (The log in the EEPROM is retained.)

● User data

User data will be treated as follows:

- User data on picture- and audio-quality adjustments are not reflected (data stored in memory will be retained).
- Data on screen position are reset to the default values (data stored in memory will be retained).

■ Remote control codes in Service Factory mode

SR Function	Main Function	Remarks
Muting	Switching the main items	Shifting to the next main item
DOWN	Switching the subtitled items	Shifting downward to the next subtitled item
UP	Switching the subtitled items	Shifting upward to the next upper layer
LEFT	Increasing the adjustment value	Increasing the adjustment value
RIGHT	Decreasing the adjustment value	Decreasing the adjustment value
SET	Switching layers	Shifting downward or upward to the next lower or upper layer
INPUT	Selecting input	Shifting the input to the next function
INPUTxx	Selecting input	Switching the input to xx
CH+	Increasing the channel number	Advancing a preset channel (effective when Function is set to TV)
CH-	Decreasing the channel number	Turning a preset channel backward (effective when Function is set to TV)
Numeric keys	Function: TV	Function: TV (previously selected channel number is selected)
BS numeric keys	Function: BS	Function: BS (previously selected channel number is selected)
POWER	Power OFF	Turning the power off
FACTORY	Factory OFF	Turning Service Factory mode off
MENU	Menu ON	Turning Service Factory mode off and Menu mode on

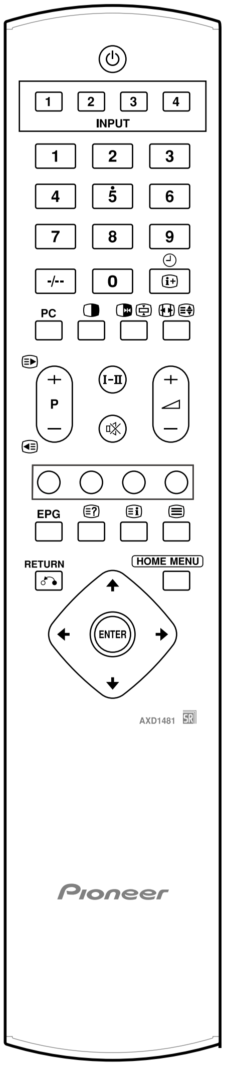

AXD1481

Changes of the Service Factory menus

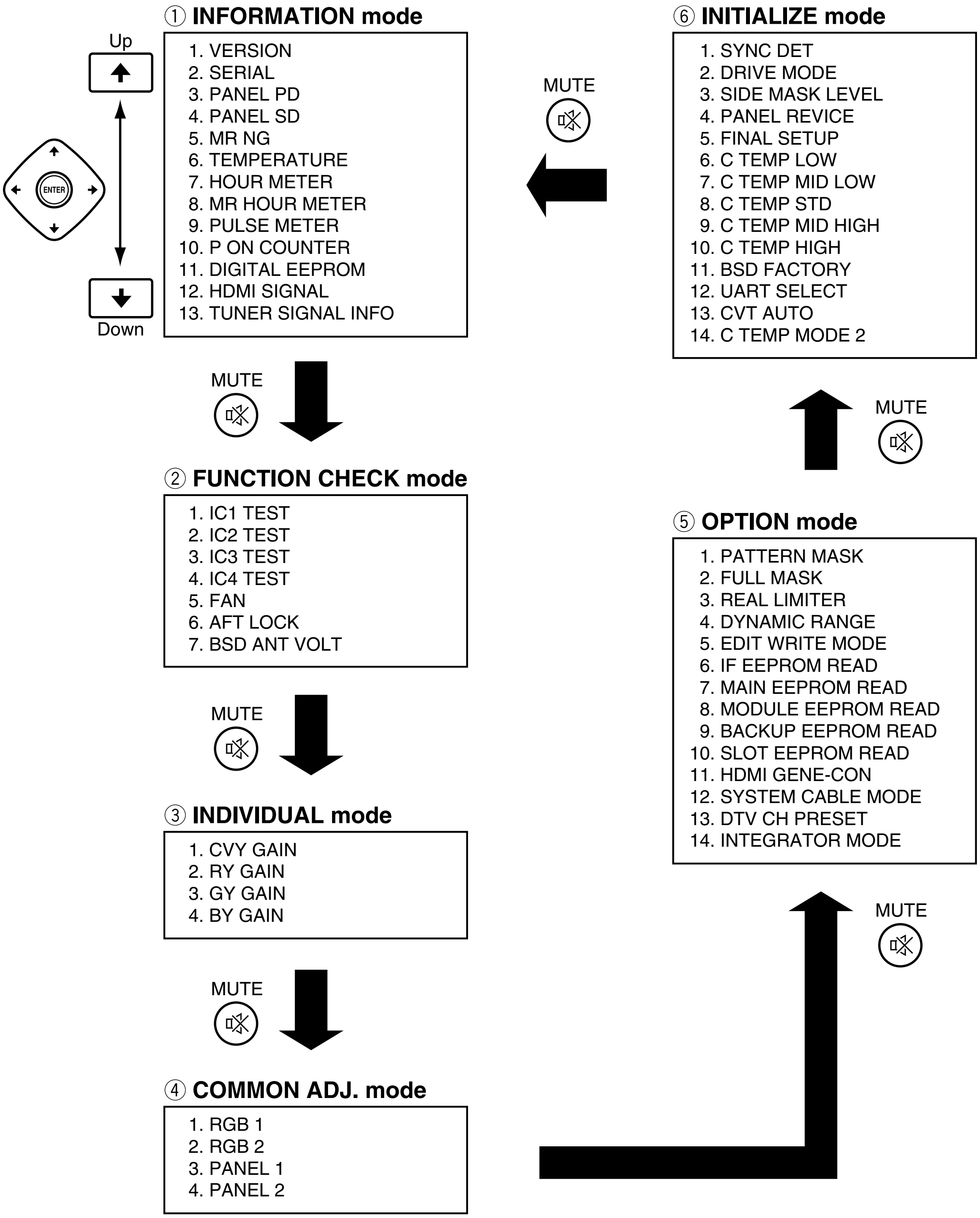

① INFORMATION mode

1. VERSION
2. SERIAL
3. PANEL PD
4. PANEL SD
5. MR NG
6. TEMPERATURE
7. HOUR METER
8. MR HOUR METER
9. PULSE METER
10. P ON COUNTER
11. DIGITAL EEPROM
12. HDMI SIGNAL
13. TUNER SIGNAL INFO

② FUNCTION CHECK mode

1. IC1 TEST
2. IC2 TEST
3. IC3 TEST
4. IC4 TEST
5. FAN
6. AFT LOCK
7. BSD ANT VOLT

③ INDIVIDUAL mode

1. CVY GAIN
2. RY GAIN
3. GY GAIN
4. BY GAIN

④ COMMON ADJ. mode

1. RGB 1
2. RGB 2
3. PANEL 1
4. PANEL 2

⑤ OPTION mode

1. PATTERN MASK
2. FULL MASK
3. REAL LIMITER
4. DYNAMIC RANGE
5. EDIT WRITE MODE
6. IF EEPROM READ
7. MAIN EEPROM READ
8. MODULE EEPROM READ
9. BACKUP EEPROM READ
10. SLOT EEPROM READ
11. HDMI GENE-CON
12. SYSTEM CABLE MODE
13. DTV CH PRESET
14. INTEGRATOR MODE

⑥ INITIALIZE mode

1. SYNC DET
2. DRIVE MODE
3. SIDE MASK LEVEL
4. PANEL REVICE
5. FINAL SETUP
6. C TEMP LOW
7. C TEMP MID LOW
8. C TEMP STD
9. C TEMP MID HIGH
10. C TEMP HIGH
11. BSD FACTORY
12. UART SELECT
13. CVT AUTO
14. C TEMP MODE 2

Indications in Service Factory mode

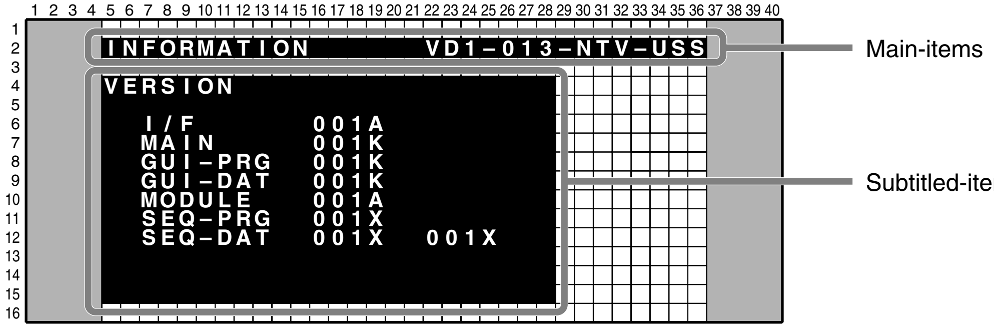
1 2 3 4 5 6 7 8 9 10 11 12 13 14 15 16 17 18 19 20 21 22 23 24 25 26 27 28 29 30 31 32 33 34 35 36 37 38 39 40
1 2 3 4 5 6 7 8 9 10 11 12 13 14 15 16
Main-items
Subtitled-items

```
INFORMATION          VD1-013-NTV-USS
VERSION

  I/F        001A
  MAIN       001K
  GUI-PRG    001K
  GUI-DAT    001K
  MODULE     001A
  SEQ-PRG    001X
  SEQ-DAT    001X   001X
```

Main-item indications

Four parameters are displayed:

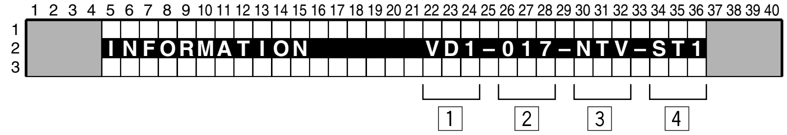
1 2 3 4 5 6 7 8 9 10 11 12 13 14 15 16 17 18 19 20 21 22 23 24 25 26 27 28 29 30 31 32 33 34 35 36 37 38 39 40
1 2 3
1
2
3
4

```
INFORMATION          VD1-017-NTV-ST1
```

1 Input function

Input Functions	On-Screen Display
INPUT 1	VD1
Terrestrial wave	AIR
CS-DIGITAL	CSD
BS-DIGITAL	BSD

2 SIG mode and screen size

Note: See SIG-Mode Tables. (See next page.)

3 Color system and signal type

Color System and Signal Type		On-Screen Display
NTSC	Composite input/ S-connector input	NTV
BLACK/WHITE		BWV
Y / CB / CR		CBR
Y / PB / PR		PBR
RGB		RGB
Digital video signal		DIG

4 Option (Destination, etc.)

Options	On-Screen Display
HD system in Europe	EHS

● SIG-Mode Table

The signal mode is displayed in three characters:
First character: Resolution of the input signal (numerics for the video signals, and alphabetics for the PC signals)
Second character: Grouping of the V frequencies

SIG-Mode table for video signals (resolutions and V frequencies)

SIG-Mode	Signal Type	Vertical Frequency fv (Hz)	Horizontal Frequency fh (kHz)
13*	SDTV • 525i	60.000	15.750
21*	SDTV • 625i	50.000	15.625
33*	SDTV • 525p	60.000	31.500
41*	HDTV • 1125i	50.000	28.125
43*		60.000	33.750
51*	SDTV • 625p	50.000	31.250
61*	HDTV • 750p	50.000	37.500
63*		60.000	45.000

SIG-Mode table for PC signals (resolutions and V frequencies)

SIG-Mode	Signal Type	Vertical Frequency fv (Hz)	Horizontal Frequency fh (kHz)
A2*	720 × 400	56.000	24.825
A5*		70.087	31.469
A8*		85.050	37.861
B3*	640 × 480	59.940	31.469
B4*		66.666	35.000
B6*		72.809	37.861
B7*		75.000	37.500
B8*		85.000	43.300
C3*	852 × 480	60.000	31.680
D2*	800 × 600	56.250	35.1556
D3*		60.317	37.879
D6*		72.188	48.077
D7*		75.000	46.875
D8*		85.061	53.674
E7*	832 × 624	74.550	49.725
F3*	1024 × 768	60.004	48.363
F5*		70.069	56.476
F7*		75.029	60.023
F8*		84.997	68.677
G2*	1280 × 768	56.250	45.113
G3*		59.833	47.986
G5*		70.000	56.137

2nd Character	Reference V Frequency	Remarks
–	–	No signal
1	50	
2	56	
3	60	
4	66	
5	70	
6	For interpolation of 72-Hz area	For distinguishing between 70-Hz or 75-Hz area
7	75	
8	85	
9 (spare)	–	
?	–	Out of range

Third character: Selection of the screen size by the user is displayed.
(○: available, ×: not available)

3rd Character	Description on GUI	VIDEO	PC	Remarks
0	DOT BY DOT	×	○	
1	4 : 3	○	○	
2	FULL (FULL1)	○	○	
3	ZOOM	○	×	
4	CINEMA	○	×	
5	WIDE	○	×	
6	FULL 14 : 9	○	×	
7	CINEMA 14 : 9	○	×	
8	FULL2	○	○	HDTV1035i
9	OVERSCAN	○	×	

① INFORMATION mode

● Operation items

No.	Function / Display	Content
1	VERSION (1)	The flash memory versions for each device are displayed. (common part)
2	VERSION (2)	The flash memory versions for each device are displayed. (individual part)
3	SERIAL	For displaying the serial number of the product (not used)
4	PANEL PD	Power-down generated on the panel side and its time of occurrence are displayed.
5	PANEL SD	Shutdown generated on the panel side and its time of occurrence are displayed.
6	MR NG	Power-down and/or shutdown generated on the Media Receiver side and their/its time of occurrence are displayed.
7	TEMPERATURE	Information on temperature is displayed.
8	HOUR METER	Cumulative power-on time to the panel is displayed.
9	MR HOUR METER	Cumulative power-on time to the Media Receiver is displayed.
10	PULSE METER	The pulse meter value on the panel side is displayed.
11	P ON COUNTER	The number of times the power to the panel was turned on is displayed.
12	DIGITAL EEPROM	The status of the backup data for the module microcomputer is displayed.
13	HDMI SIGNAL INFO.	The file information of HDMI series are displayed.
14	TUNER SIGNAL INFO.	The radio-wave conditions input to the GCR and IC 1 are displayed.

1. VERSION (1)

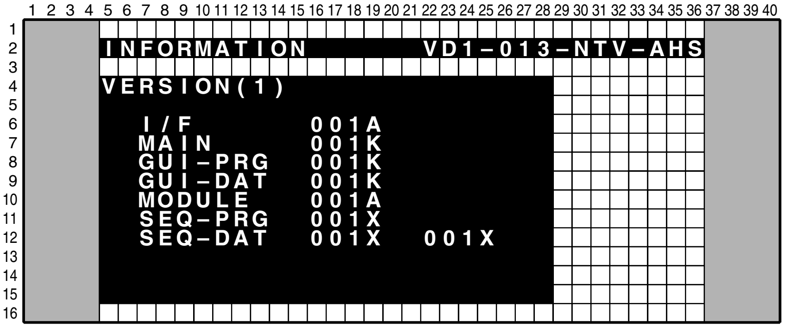

```
INFORMATION          VD1–013–NTV–AHS

VERSION(1)

  I/F        001A
  MAIN       001K
  GUI–PRG    001K
  GUI–DAT    001K
  MODULE     001A
  SEQ–PRG    001X
  SEQ–DAT    001X   001X
```

The flash memory versions for each device are displayed.

Flash memory of Device	On-Screen Display
User IF microcomputer (MR: IC8702)	I / F
Main microcomputer (MR: IC7207)	MAIN
Program for IC 3 (MR: IC7101)	GUI–PRG
GUI data for IC 3 (MR: IC7101)	GUI–DAT
Module microcomputer (for the PDP)	MODULE
Program for IC 4 (for the PDP)	SEQ–PRG
Sequence data for IC 4 (for the PDP)	SEQ–DAT

2. VERSION (2)

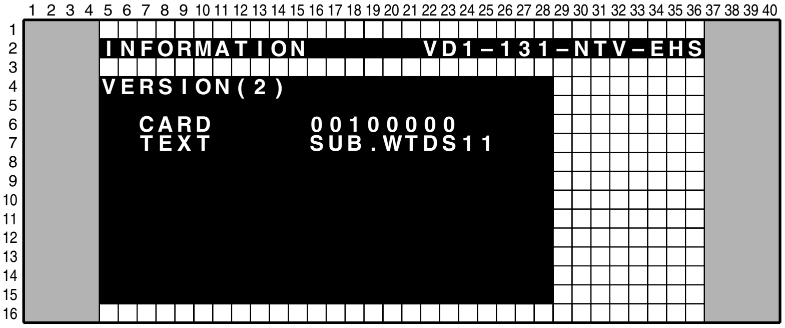

```
INFORMATION          VD1–131–NTV–EHS

VERSION(2)

  CARD       00100000
  TEXT       SUB.WTDS11
```

European HD

Device	Name Display	Version Display	Remarks
PC-CARD	CARD	8 character	
TELTEXT	TEXT	60 character	

4. PANEL PD

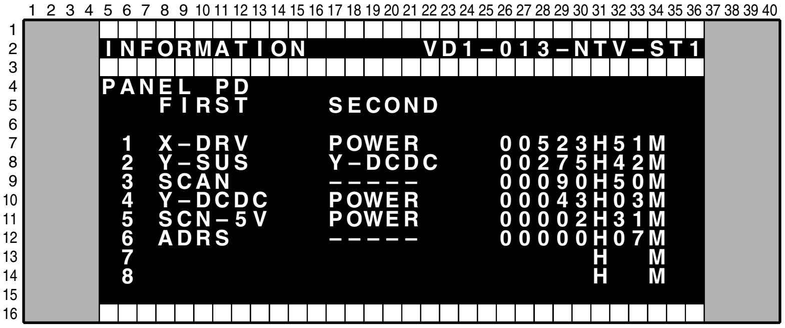

```
INFORMATION         VD1-013-NTV-ST1
PANEL PD
   FIRST       SECOND

 1 X-DRV       POWER       00523H51M
 2 Y-SUS       Y-DCDC      00275H42M
 3 SCAN        -----       00090H50M
 4 Y-DCDC      POWER       00043H03M
 5 SCN-5V      POWER       00002H31M
 6 ADRS        -----       00000H07M
 7                              H  M
 8                              H  M
```

Power-down information only on the panel side is displayed.

• Panel power-down information

No.	Type of Power-down	On-Screen Display	No.	Type of Power-down	On-Screen Display
1	No corresponding item	- - - - -	7	Power-down of the Y-SUS system	Y-SUS
2	Power-down of the main power supply system	POWER	8	Power-down of the address system	ADRS
3	Power-down of the scanning system	SCAN	9	Power-down of the X-DRIVE circuitry	X-DRV
4	Power-down in the path between the scanning system and 5-V power supply	SCN-5V	A	Power-down of the X-DC/DC converter	X-DCDC
5	Power-down of the Y-Drive system	Y-DRV	B	Power-down of the X-SUS system	X-SUS
6	Power-down of the Y-DC/DC converter	Y-DCDC	C	Power-down of the driving IC power supply system	D-DCDC

5. PANEL SD

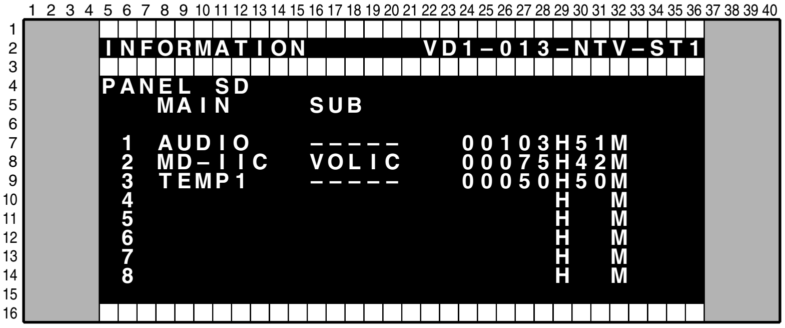

```
INFORMATION         VD1-013-NTV-ST1
PANEL SD
   MAIN       SUB

 1 AUDIO      -----     00103H51M
 2 MD-IIC     VOLIC     00075H42M
 3 TEMP1      -----     00050H50M
 4                           H  M
 5                           H  M
 6                           H  M
 7                           H  M
 8                           H  M
```

The shutdown log only on the panel side is displayed.

• Panel shutdown information

No.	Type of Shutdown	On-Screen Display (MAIN)	Remarks
1	Abnormality in IC 4 communication	IC4	
2	Abnormality in module microcomputer IIC communication	MD-IIC	Subcategories exist. (EEPROM4K : IC5206, EROM2K : IC402, VOLIC : IC3502)
3	Moisture-condensation detection	DEW	
4	Abnormality in panel temperature	TEMP1	
5	Short-circuiting of the speakers	AUDIO	
6	Abnormality in module microcomputer communication	MODULE	

6. MR NG

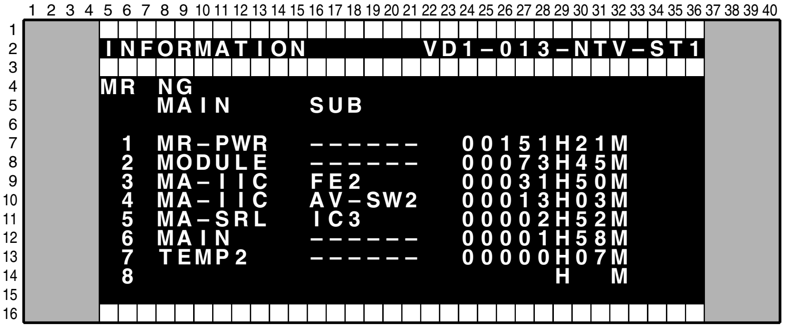

```
INFORMATION      VD1-013-NTV-ST1

MR NG
   MAIN    SUB

 1 MR-PWR  ------  00151H21M
 2 MODULE  ------  00073H45M
 3 MA-IIC  FE2     00031H50M
 4 MA-IIC  AV-SW2  00013H03M
 5 MA-SRL  IC3     00002H52M
 6 MAIN    ------  00001H58M
 7 TEMP2   ------  00000H07M
 8                      H  M
```

Information on power-down and shutdown of the Media Receiver side is displayed.

• Media Receiver NG information

No.	Type of Failure	On-Screen Display (MAIN)	Remarks
1	Power-down of the MR power supply	MR-PWR	
2	Abnormality in module microcomputer communication	MODULE	
3	Abnormality in 3-wire serial communication of the main microcomputer	MA-SRL	Subcategories exist.
4	Abnormality in main microcomputer IIC communication	MA-IIC	Subcategories exist.
5	Abnormality in main microcomputer communication	MAIN	
6	Abnormality in temperature of the Media Receiver	TEMP2	
7	Fan stopped.	FAN	
8	Abnormality in communication of the digital tuner	BS-D	Subcategories exist.
9	Abnormality in the ASIC power supply on the MR side	M-DCDC	

• Subcategory information

Type of Shutdown	Subcategory	Remarks
MA-SRL	IF microcomputer (IC8702), IC2 (IC7004), IC3 (IC7101)	
MA-IIC	MA-EEP (IC7205), IC1-M (IC6107), IC1-S (IC6255), HDMI1 (IC6801), HDMI2 (IC6881)*2, AD-M (IC6402), AD-S (IC6602), IC6 (IC6951), CCD (IC8903)*2, FE1 (U7501), FE2 (U7502)*2, AV-SW1 (IC8002), AV-SW2 (IC8005), TX-COM (IC8904)*3, MPX (IC7502)*3	*2 : U.S. model only *3 : Europe model and General area model
BS-D or DTV (Japan or U.S. only)	PS/RST	No power, or reset status continued
	RETRY	The signal 0x02 (ready) has not been received.
	DEVICE	Abnormality in BSD status
CARD	COMM	
	DEVICE	
	RESET	

7. TEMPERATURE

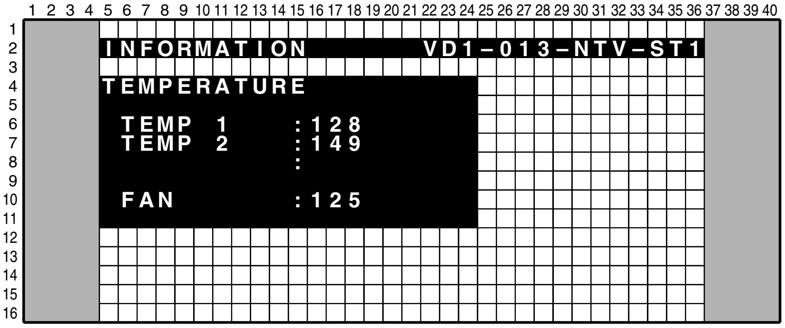

```
INFORMATION      VD1-013-NTV-ST1

TEMPERATURE

 TEMP 1   :128
 TEMP 2   :149
          :

 FAN      :125
```

TEMP1: The value read from the temperature sensor built into the panel is displayed in the range of 000-255.
Note: Refer to the service manual of the panel.

TEMP2: The value read from the temperature sensor built into the Media Receiver is displayed in the range of 000-255. For reference, the approximate value for 60°C is 169 and for 35°C is 131.

FAN: The value of the Fan output is displayed. At shipment, the output is controlled in 2 steps, and the value for strong output is set to about 131, and the value for weak output is set to about 93.

8. HOUR METER

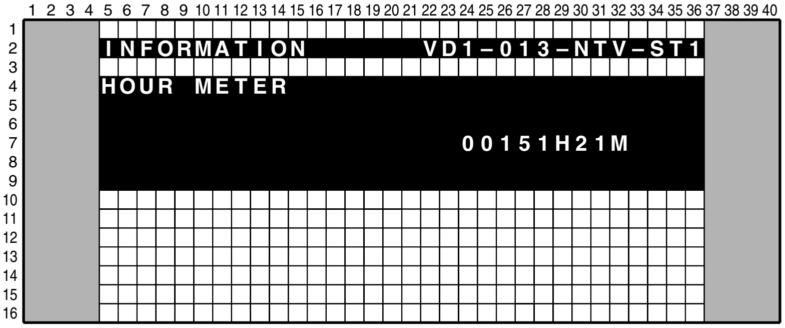

```
INFORMATION          VD1-013-NTV-ST1
HOUR METER

                        00151H21M
```

The cumulative power-on time of the panel is displayed.

9. MR HOUR METER

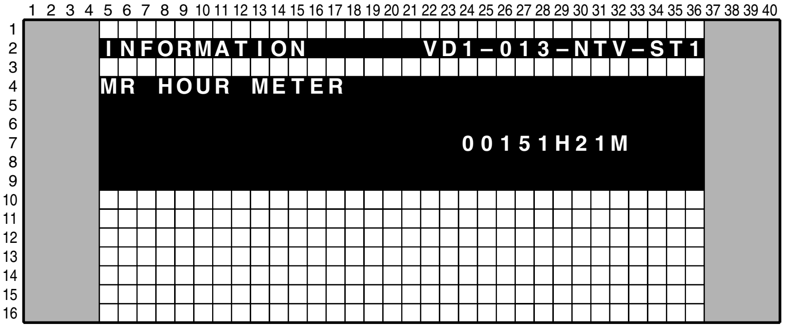

```
INFORMATION          VD1-013-NTV-ST1
MR HOUR METER

                        00151H21M
```

The cumulative power-on time of the Media Receiver is displayed.

10. PULSE METER

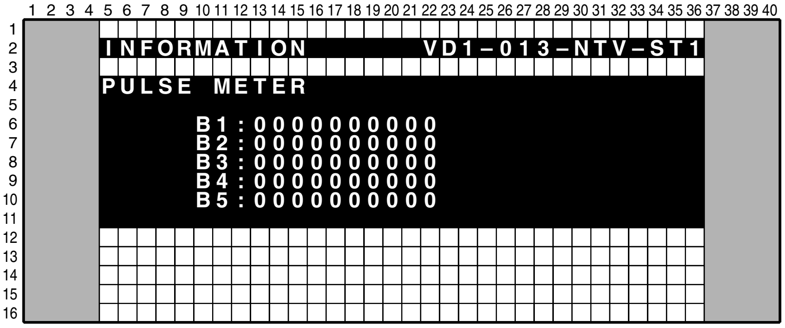

```
INFORMATION          VD1-013-NTV-ST1
PULSE METER

     B1:0000000000
     B2:0000000000
     B3:0000000000
     B4:0000000000
     B5:0000000000
```

The cumulative number of pulses of the panel is displayed.

Note : Dividing screen into sixteen times sixteen and counting five different locations on a screen.
Each item, it's counted total 3840 pixels (for 50 inch) or 3072 pixels (for 43 inch) discharging.
(1280/16 x 768/16 = 3840, 1024/16 x 768/16 = 3072)
The first digit numbr is 1M pulses.

11. P ON COUNTER

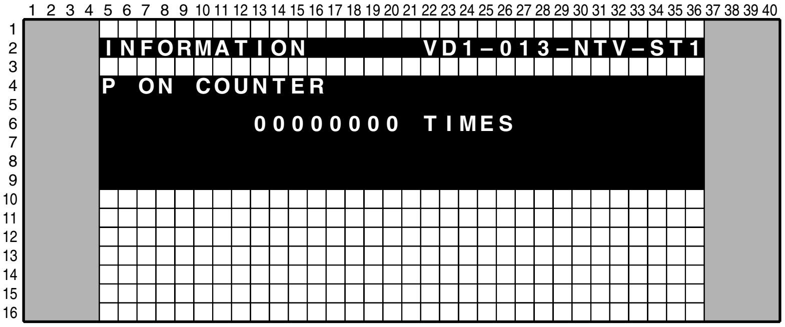

```
INFORMATION          VD1-013-NTV-ST1
P ON COUNTER
        00000000 TIMES
```

The cumulative number of times the panel was turned on is displayed.

12. DIGITAL EEPROM

When the DIGITAL Assy of the PDP is to be replaced, the adjustment values in it can be temporarily stored in the ROM then be written on the new Assy after replacement. (This function is not supported for initially produced products. It is planned for this function to be supported as soon as it becomes possible.)

Whether adjustment has been made on the DIGITAL Assy of the PDP or not (i.e., in the state of a new service part), and whether the data on any adjustment values are retained in the backup ROM or not are displayed.

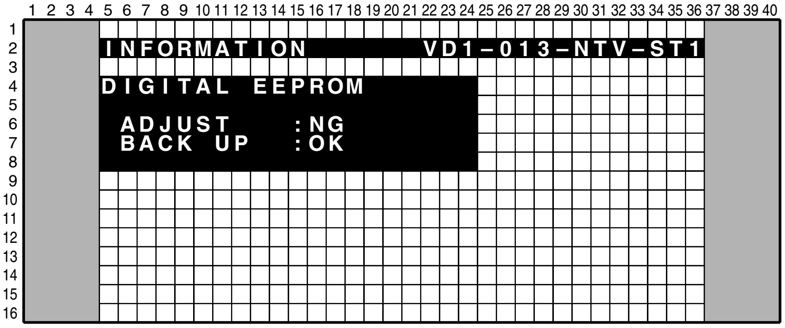

INFORMATION VD1-013-NTV-ST1

DIGITAL EEPROM

ADJUST :NG
BACK UP :OK

• Downloading the data from the backup ROM

(This must be performed after the DIGITAL Assy is replaced.)

To download the data from the backup ROM, press the ENTER key while the above screen is displayed. The display changes as shown below. Move the cursor to YES then press the ENTER key. The data in the backup ROM are downloaded into the new Assy.

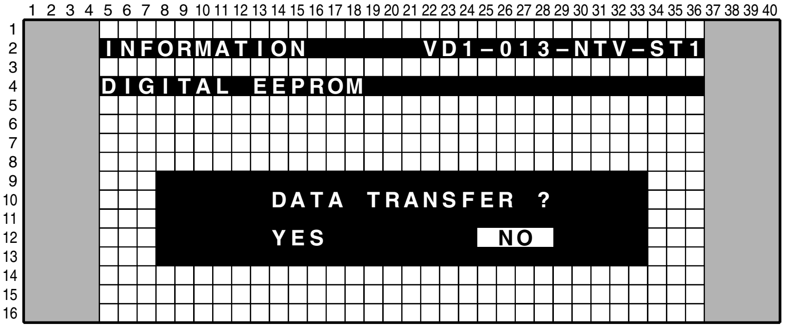

INFORMATION VD1-013-NTV-ST1

DIGITAL EEPROM

DATA TRANSFER ?

YES NO

• Clearing the data in the ROM of the DIGITAL Assy

The display below is automatically displayed after either YES or NO is selected on the display shown above. Move the cursor to YES then press the ENTER key. Then all data on adjustment values in the ROM of the DIGITAL Assy are cleared.

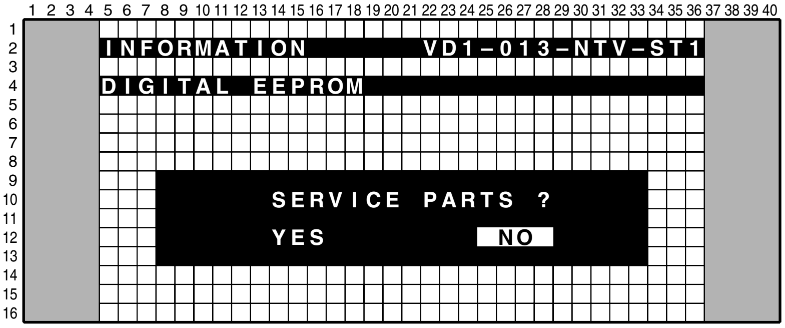

INFORMATION VD1-013-NTV-ST1

DIGITAL EEPROM

SERVICE PARTS ?

YES NO

13. HDMI SIGNAL INFO

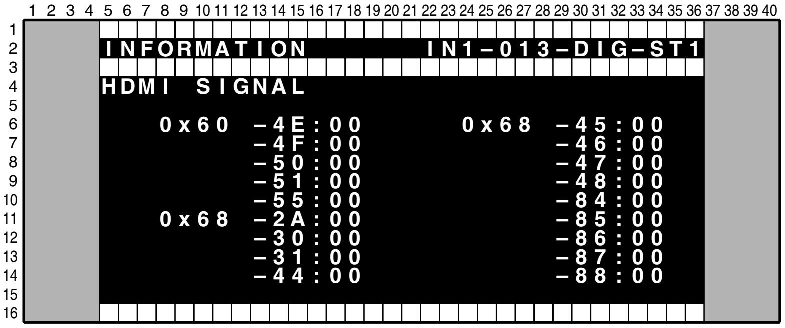

```
INFORMATION      IN1-013-DIG-ST1

HDMI SIGNAL

   0x60 -4E:00     0x68 -45:00
        -4F:00          -46:00
        -50:00          -47:00
        -51:00          -48:00
        -55:00          -84:00
   0x68 -2A:00          -85:00
        -30:00          -86:00
        -31:00          -87:00
        -44:00          -88:00
```

Technical examination display
(Reading status registers in HDMI receiver and displaying them by HEX value.)

14. TUNER SIGNAL INFO

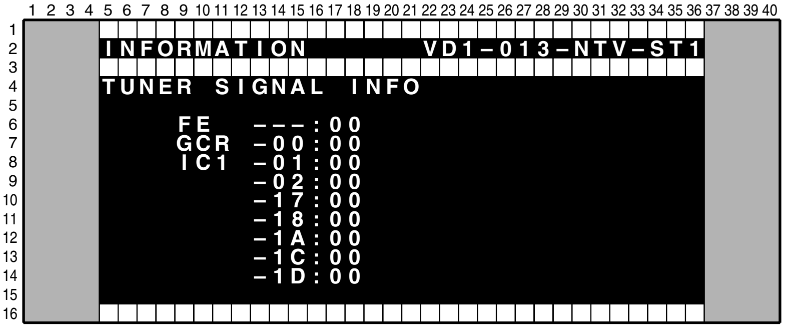

```
INFORMATION      VD1-013-NTV-ST1

TUNER SIGNAL INFO

    FE  ---:00
    GCR -00:00
    IC1 -01:00
        -02:00
        -17:00
        -18:00
        -1A:00
        -1C:00
        -1D:00
```

For technical discussion

② FUNCTION CHECK

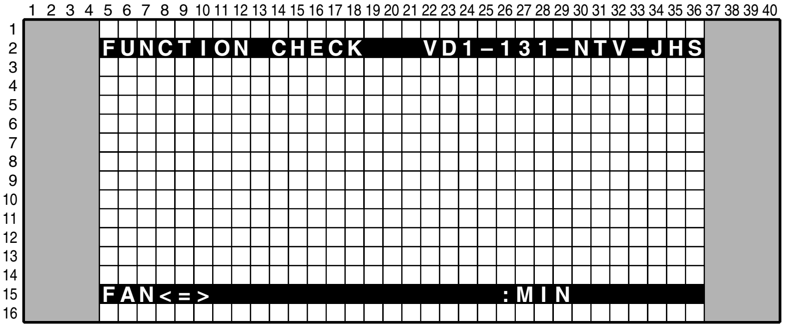
1 2 3 4 5 6 7 8 9 10 11 12 13 14 15 16 17 18 19 20 21 22 23 24 25 26 27 28 29 30 31 32 33 34 35 36 37 38 39 40
1 2 3 4 5 6 7 8 9 10 11 12 13 14 15 16
FUNCTION CHECK VD1–131–NTV–JHS
FAN<=> :MIN

No last memory in this menu

No.	Display	Detail	Remarks	232C Command
1	IC1 TEST		For CMX	
2	IC2 TEST		For CMX	
3	IC3 TEST		For CMX	
4	IC4 TEST		For CMX	
5	FAN <=>	: MINI ⇔ CONT ⇔ MAX		*1
6	AFT <=>	UNLOCKED ⇔ LOCKED	For Factory use	ALN/ALY
7	BSD ANT VOLT <=>	15V ⇔ 11V ⇔ 0	Only domestic model	BVH/BVM/BVL
8	AUTO PRESET CHECK <=>	NO ⇔ YES	Only Europe HD and for Factory use	None

2.1 FAN

Controls FAN speed by force. (MIN : STOP, CNT : Low Speed, MAX : High)
Temp sensor is working only displaying data value in service factory mode.
After getting off service factory mode, this function is set to normal automatically.

2.2 AFT LOCK

For production line use only
Stop AFT tuner received function and receive a center frequency.
After turning off a unit (including stand-by mode), this setting is set normal (AFT function) automatically.
It's performed to two tuner and DTV tuner to U.S. model.

2.3 AUTO PRESET CHECK

For production line use only

Select No.	Display	Function	Remarks
1 (Default)	NO		Performing this function when shifting from "NO" to "YES".
7	YES	Perform AUTO PRESET function to specific frequency to reduce AUTO RESET time at production line.	

⑤ OPTION mode

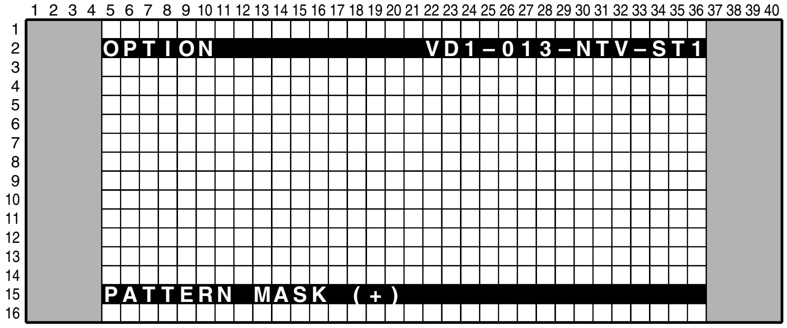

No.	Function/Display	Content	Corresponding RS-232C Command
1	PATTERN MASK (+)	Selecting the pattern mask of IC4	
2	FULL MASK (+)	Selecting the raster mask of IC4	
3	PEAK LIMITER	ON ⇔ FFF	PAN/PAF
4	DYNAMIC RANGE	ON ⇔ FFF	DYY/DYN
5	EDID WRITE MODE	DISABLE ⇔ ENABLE	EWY/EWN
9	EU CH PRESET	FACTORY ⇔ USER	

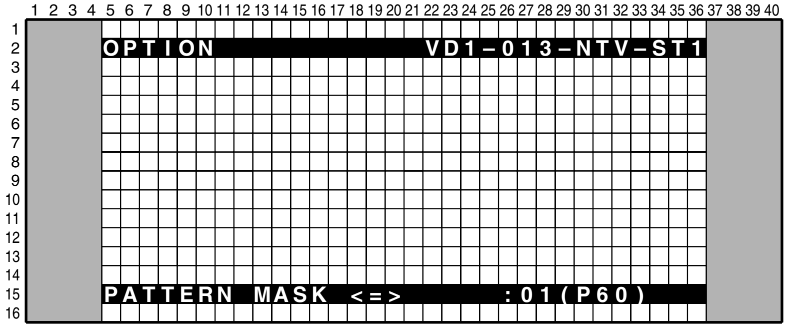

The mask frequency can be cyclically changed (see the table below) by pressing the left or right cursor key. The mask pattern can be cyclically changed by pressing the up or down cursor key. Approximately 2 seconds after either the up or down cursor key is pressed, the mask screen will appear.

• Frequency selection while the mask is displayed

No.	Function/Display	Content	Corresponding RS-232C Command
0	V50	Video 50-Hz sequence	F50
1	V60 (initial value)	Video 60-Hz sequence	F60
2	P60	PC 60-Hz sequence	F61
3	P70	PC 70-Hz sequence	F70
4	V72	Video 72-Hz sequence	F72
5	V75	Video 75-Hz sequence	F75

⑥ INITIALIZE mode

(For managing switching of the initial settings and destination setting)

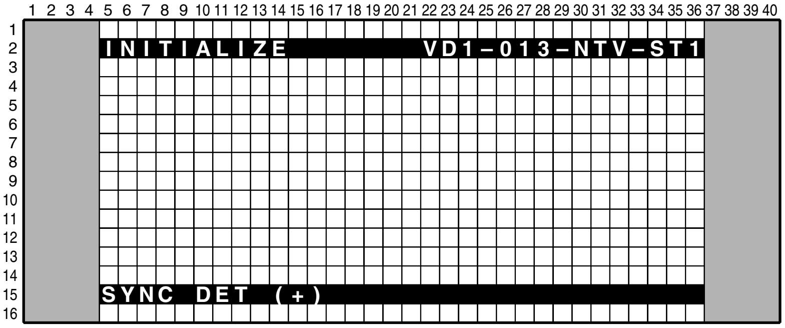
1 2 3 4 5 6 7 8 9 10 11 12 13 14 15 16 17 18 19 20 21 22 23 24 25 26 27 28 29 30 31 32 33 34 35 36 37 38 39 40
1 2 3 4 5 6 7 8 9 10 11 12 13 14 15 16
INITIALIZE
VD1-013-NTV-ST1
SYNC DET (+)

No.	Function/Display	Content
1	SYNC DET (+)	For setting the parameter for sync detection of IC1/GCR
2	DRIVE MODE (+)	(Not used)
3	SIDE MASK LEV (+)	(Not used)
4	PANEL REVICE (+)	(Not used)
5	FINAL SETUP (+)	
6	C TEMP LOW (+)	
7	C TEMP MID LOW (+)	
8	C TEMP STD (+)	
9	C TEMP MID HIGH (+)	
10	C TEMP HIGH (+)	
11	BSD FACTORY (+)	(Not used)
12	UART SELECT <=>	1200-232C ⇔ ••• ⇔ 38400-232C ⇔ 9600-SR+
13	CVT AUTO <=>	DISABLE ⇔ ENABLE (For Factory use)

- When there is a modification log, if the “ i+ ” key is held pressed for at least 3 seconds while the above display is displayed, the modification log will be cleared.

• UART SELCT

Option No.	Function / Display	Operation / Control	Remarks	Corresponding RS-232C Command
1 (initial setting)	9600-SR+	To set to SR+ (9600 BPS)	For switching external communication between RS-232C and SR+	BR0
2	1200-232C	To set to RS-232C (1200 BPS)		BR1
3	2400-232C	To set to RS-232C (2400 BPS)		BR2
4	4800-232C	To set to RS-232C (4800 BPS)		BR3
5	9600-232C	To set to RS-232C (9600 BPS)		BR4
6	19200-232C	To set to RS-232C (19200 BPS)		BR5
7	38400-232C	To set to RS-232C (38400 BPS)		BR6

Tips: How to change the SR+/RS-232C setting without entering Service Factory mode
Refer to the section "6.3 USING RS-232C COMMANDS".

6.8 LIST OF RS-232C COMMANDS

RS-232C commands can be used in Service Factory mode.
Before using RS-232C commands, it is necessary to change the factory presetting. See "6.3. USING RS-232C COMMANDS."

Command	Operation	Remarks
A		
ABL	Adjusting power consumption	
B		
BCP	Transmitting the backup data to the DIGITAL Assy	
BR0	UART setting: SR+ (9600 BPS)	Any RS-232C command to the Media Receiver becomes disabled as soon as this command is issued.
BR1	UART setting: RS-232C (1200 BPS)	
BR2	UART setting: RS-232C (2400 BPS)	
BR3	UART setting: RS-232C (4800 BPS)	
BR4	UART setting: RS-232C (9600 BPS)	
BR5	UART setting: RS-232C (19200 BPS)	
BR6	UART setting: RS-232C (38400 BPS)	
BSL	Adjusting side mask B	
BVH	Setting the power supply for the BSD antenna to 15 V	
BVL	Setting the power supply for the BSD antenna to 11 V	
BVM	Setting the power supply for the BSD antenna to 0 V	
BYG	BY GAIN	
C		
CNG	Clearing MR NG information	
CPC	Clearing the power-on counter	
CPD	Clearing power-down information	
CPM	Clearing the pulse meter	
CSD	Clearing shutdown information	
D		
DIY	Turning on the on-screen display	While the DIY command is in force, the duration of on-screen display is unlimited.
DIN	Turning off the on-screen display	On-screen display is prohibited.
DOF	Erasing the currently displayed indications	If another command is received by the Media Receiver, an on-screen display is displayed.
DRF	Turning off the power for the drive system	
DRN	Turning on the power for the drive system	
DW*	Decreasing the adjustment value by *	*: 1-9, 0 (0 means 10), or F (making the adjustment value the minimum)
E		
EWN	Prohibiting writing of EDID data	
EWY	Permitting writing of EDID data	
F		
F50	Video 50-Hz sequence	
F60	Video 60-Hz sequence	
F61	PC 60-Hz sequence	
F70	PC 70-Hz sequence	
F72	Video 72-Hz sequence	
F75	Video 75-Hz sequence	
FAJ	Determining the adjustment values for the unit	
FAN	Turning Service Factory mode off	The GUI equivalent to that usually displayed when the power is turned on is displayed.
G		The GET-group commands are effective at any time, including during Standby mode.
GAJ	Obtaining the adjustment values for the panel	
GMM	Switching the gamma levels	Setting value: 000-007
GNG	Obtaining NG data of the MR	
GNM	Obtaining the serial No. of the MR	
GPC	Obtaining the P ON COUNTER value	
GPD	Obtaining power-down information	
GPR	Obtaining the PANEL REVISE data	
GPM	Obtaining the PULSE METER data	
GPW	Obtaining the PANEL W/B data	
GS1	Obtaining the version data for each device	
GS2	Obtaining data on various operations	
GSD	Obtaining shutdown information	
GSL	Adjusting side mask G	

Command	Operation	Remarks
I		
IN1	Input selection: Input 1	
IN2	Input selection: Input 2	
IN3	Input selection: Input 3	
IN4	Input selection: Input 4	
IN5	Input selection: Input 5	
INA	Selection of the tuner for terrestrial analog signals (Antenna A)	
INB	Selection of the tuner for terrestrial analog signals (Antenna B)	
INC	Selection of the tuner for terrestrial digital signals	
IND	Selection of the tuner for satellite digital signals (BS)	
INE	Selection of the tuner for satellite digital signals (CS1)	
INF	Selection of the tuner for satellite digital signals (CS2)	
ING	Selection of iLink input functions	
INF	SD card	
M		
M00	Mask mode: OFF	
M01	White: 0-100%	
M02	Aging mask	
M03	Aging mask (detection of still picture: OFF)	
M10	RAMP slant 1	
M11	RAMP slant 4	
M12	RAMP slant 1 shifting	
M13	RAMP slant 4 shifting	
M14	V RAMP	
M15	H/V RAMP	
M1G	IC1 MAIN GAIN	
M1O	IC1 MAIN OFFSET	
M20	WINDOW-Low: 102 / High: 870	
M21	WINDOW-Low: 102 / High: 1023	
M22	WINDOW-Low: 0 / High: 1023	
M23	WINDOW-High: 1023 (CENTER)	
M24	WINDOW-PEAK WINDOW	Area 1.25%
M25	WINDOW-1/7 vertical window	
M26	WINDOW-magenta/green stripe	
M27	WINDOW-green/magenta stripe	
M28	Window (black & white [1 × 8], checkered pattern [for EMG check])	
M29	Window (for W/B adjustment, magenta, yellow)	
M2E	Wiper to prevent phosphor burn	
M30	COLOR BAR	
M31	Slanted lines	
M51	Raster-white	
M52	Raster-red	
M53	Raster-green	
M54	Raster-blue	
M55	Raster-black	
M56	Raster-cyan	
M57	Raster-magenta	
M58	Raster-yellow	
M59	Raster-cyan 274	
M60	Raster-50 flesh color	
M61	Raster-50 light purple	
M62	Raster-50 sky blue	
M63	Raster-red 779	
M64	Raster-cyan 218	
M65	Raster-cyan 448	
M66	Raster-43 flesh color	
M67	Raster-red 640	
M68	Raster-magenta 98	
M69	Raster-43 sky blue 1	
M70	Raster-43 sky blue 2	
M71	Raster-43 light purple	
M72	Raster-blue 960	
M73	Raster-gray 511 (spare)	
M74	Raster-gray 511 (spare)	

Command	Operation	Remarks
M		
MRG	AD MAIN R GAIN	
MRO	AD MAIN R OFFSET	
MGG	AD MAIN G GAIN	
MGO	AD MAIN G OFFSET	
MBG	AD MAIN B GAIN	
MBO	AD MAIN B OFFSET	
P		
PBH	Panel W/B B-HIGH adjustment	
PBL	Panel W/B B-LOW adjustment	
PGH	Panel W/B G-HIGH adjustment	
PGL	Panel W/B G-LOW adjustment	
POF	Turning the power OFF	
PRH	Panel W/B R-HIGH adjustment	
PRL	Panel W/B R-LOW adjustment	
R		
RYG	RY GAIN	
RSL	Adjustment of side mask R	
S		
S1G	IC1 SUB GAIN	
S1O	IC1 SUB OFFSET	
SBG	AD SUB B GAIN	
SBO	AD SUB B OFFSET	
SFI	Initialization of the full mask table	
SGG	AD SUB G GAIN	
SGO	AD SUB G OFFSET	
SRG	AD SUB R GAIN	
SRO	AD SUB R OFFSET	
T		
TSY	Enabling the TRAP switch	The command is effective even during Standby mode.
U		
UP*	Increasing the adjustment value by *	*: 1-9, 0 (0 means 10), or F (making the adjustment value the maximum)
UAJ	Resetting all data in the DIGITAL Assy to those of a new service part	
V		
VOF	Offset voltage adjustment	
VSU	SUS voltage adjustment	
X		
XD1	D1 trailing-edge pulse of X-SUS	
XD2	D2 trailing-edge pulse of X-SUS	
XU1	U1 leading-edge pulse of X-SUS	
XU2	U2 leading-edge pulse of X-SUS	
Y		
YD1	D1 trailing-edge pulse of Y-SUS	
YD2	D2 trailing-edge pulse of Y-SUS	
YD3	D3 trailing-edge pulse of Y-SUS	
YD4	D4 trailing-edge pulse of Y-SUS	
YU1	U1 leading-edge pulse of Y-SUS	
YU2	U2 leading-edge pulse of Y-SUS	

6.9 OUTLINE OF COMMANDS

■ GET Commands

GS1: Returning information on the model and the version of the software

Order	Data	Size
1	Data on the display	3 bytes
2	Version of the module microcomputer	4 bytes
3	Version of the IC4-MANTA	4 bytes
4	Sequence version (50VIDEO)	4 bytes
5	Sequence version (50PC)	4 bytes
6	Sequence version (43VIDEO)	4 bytes
7	Sequence version (43PC)	4 bytes
8	Version of the IF microcomputer	4 bytes
9	Version of the main microcomputer	4 bytes
10	Version of the IC3-MANTA	4 bytes
11	Version of the OSD	4 bytes
12	Version of the DTV microcomputer (only for models for North America)	4 bytes
13	Version of the CC microcomputer (only for models for North America)	4 bytes
14	Version of the TEXT microcomputer (only for models for Europe)	4 bytes

Breakdown of the data on the display

Data	Model
HD5	PDP-504HD series
HD4	PDP-434HD series

GPM: Returning the data of the PDP pulse meter

Order	Data	Size
1	Pulse meter (Block area 1)	10 bytes
2	Pulse meter (Block area 2)	10 bytes
3	Pulse meter (Block area 3)	10 bytes
4	Pulse meter (Block area 4)	10 bytes
5	Pulse meter (Block area 5)	10 bytes

Note: Refer to the service manual of the panel.

GPC: Returning the cumulative number of times the power to the PDP was turned on

Order	Data	Size
1	Power-on counter	8 bytes

• Commands for clearing the logs

Parameter	Corresponding RS-232C Command
PD INFO	CPD
SD INFO	CSD
NG INFO	CNG
HOUR METER	CHM
MR HOUR METER (Only for the system model)	CHR
PULSE METER	CPM
P ON COUNTER	CPC

GPD: Returning the power-down data (log) of the PDP

Order	Data	Size	Order	Data	Size
1	Latest "1st PD" data	1 byte	17	Fifth latest “1st PD” data	1 byte
2	Latest "2nd PD" data	1 byte	18	Fifth latest “2nd PD” data	1 byte
3	Data of hour meter for the latest PD	7 bytes	19	Data of hour meter for the fifth latest PD	7 bytes
4	Data on temperature for the latest PD (TEMP1)	3 bytes	20	Data on temperature for the fifth latest PD (TEMP1)	3 bytes
5	Second latest “1st PD” data	1 byte	21	Sixth latest “1st PD” data	1 byte
6	Second latest “2nd PD” data	1 byte	22	Sixth latest “2nd PD” data	1 byte
7	Data of hour meter for the second latest PD	7 bytes	23	Data of hour meter for the sixth latest PD	7 bytes
8	Data on temperature for the second latest PD (TEMP1)	3 bytes	24	Data on temperature for the sixth latest PD (TEMP1)	3 bytes
9	Third latest “1st PD” data	1 byte	25	Seventh latest “1st PD” data	1 byte
10	Third latest “2nd PD” data	1 byte	26	Seventh latest “2nd PD” data	1 byte
11	Data of hour meter for the third latest PD	7 bytes	27	Data of hour meter for the seventh latest PD	7 bytes
12	Data on temperature for the third latest PD (TEMP1)	3 bytes	28	Data on temperature for the seventh latest PD (TEMP1)	3 bytes
13	Fourth latest “1st PD” data	1 byte	29	Eighth latest “1st PD” data	1 byte
14	Fourth latest “2nd PD” data	1 byte	30	Eighth latest “2nd PD” data	1 byte
15	Data of hour meter for the fourth latest PD	7 bytes	31	Data of hour meter for the eighth latest PD	7 bytes
16	Data on temperature for the fourth latest PD (TEMP1)	3 bytes	32	Data on temperature for the eighth latest PD (TEMP1)	3 bytes

• Details on "1st/2nd PD" data

Data	Power-down Point
0	No power-down
1	Not used (for MR-POWER)
2	P-POWER
3	SCAN
4	SCN-5V
5	Y-DRIVE
6	Y-DCDC
7	Y-SUS
8	ADRS
9	X-DRIVE
A	X-DCDC
B	X-SUS
C	DIG-DCDC
D, E	Spare
F	Power-down point not identified

GSD: Returning the shutdown data (log) of the PDP

Order	Data	Size	Order	Data	Size
1	Latest SD data	1 byte	17	Fifth latest SD data	1 byte
2	Data of subcategory for the latest SD	1 byte	18	Data of subcategory for the fifth latest SD	1 byte
3	Data of hour meter for the latest SD	7 bytes	19	Data of hour meter for the fifth latest SD	7 bytes
4	Data on temperature for the latest SD (TEMP1)	3 bytes	20	Data on temperature for the fifth latest SD (TEMP1)	3 bytes
5	Second latest SD data	1 byte	21	Sixth latest SD data	1 byte
6	Data of subcategory for the second latest SD	1 byte	22	Data of subcategory for the sixth latest SD	1 byte
7	Data of hour meter for the second latest SD	7 bytes	23	Data of hour meter for the sixth latest SD	7 bytes
8	Data on temperature for the second latest SD (TEMP1)	3 bytes	24	Data on temperature for the sixth latest SD (TEMP1)	3 bytes
9	Third latest SD data	1 byte	25	Seventh latest SD data	1 byte
10	Data of subcategory for the third latest SD	1 byte	26	Data of subcategory for the seventh latest SD	1 byte
11	Data of hour meter for the third latest SD	7 bytes	27	Data of hour meter for the seventh latest SD	7 bytes
12	Data on temperature for the third latest SD (TEMP1)	3 bytes	28	Data on temperature for the seventh latest SD (TEMP1)	3 bytes
13	Fourth latest SD data	1 byte	29	Eighth latest SD data	1 byte
14	Data of subcategory for the fourth latest SD	1 byte	30	Data of subcategory for the eighth latest SD	1 byte
15	Data of hour meter for the fourth latest SD	7 bytes	31	Data of hour meter for the eighth latest SD	7 bytes
16	Data on temperature for the fourth latest SD (TEMP1)	3 bytes	32	Data on temperature for the eighth latest SD (TEMP1)	3 bytes

• Details on the shutdown data

Data	Cause of Shutdown
0	No abnormality
1	IC4 (IC5401)
2	Module microcomputer IIC
3	Abnormality in RST2 (power decrease of DC-DC converter)
4	Panel having abnormally high temperature
5	Audio failure (short-circuiting of the speakers)
6 - F	Spares

• Data on the shutdown subcategories for the module microcomputer IIC

Data	Cause of Shutdown
0	No subcategory
1	EEPROM (4k) (IC5206)
2	EEPROM (2k) (IC4002)
3	Volume IC (IC3502)

GNG: Returning the data (logs) on power-down and shutdown of the Media Receiver

Order	Data	Size	Order	Data	Size
1	Latest NG data	1 byte	17	Fifth latest NG data	1 byte
2	Data of subcategory for the latest NG	1 byte	18	Data of subcategory for the fifth latest NG	1 byte
3	Data of MR hour meter for the latest NG	7 bytes	19	Data of MR hour meter for the fifth latest NG	7 bytes
4	Data on temperature for the latest NG (TEMP2)	3 bytes	20	Data on temperature for the fifth latest NG (TEMP2)	3 bytes
5	Second latest NG data	1 byte	21	Sixth latest NG data	1 byte
6	Data of subcategory for the second latest NG	1 byte	22	Data of subcategory for the sixth latest NG	1 byte
7	Data of MR hour meter for the second latest NG	7 bytes	23	Data of MR hour meter for the sixth latest NG	7 bytes
8	Data on temperature for the second latest NG (TEMP2)	3 bytes	24	Data on temperature for the sixth latest NG (TEMP2)	3 bytes
9	Third latest NG data	1 byte	25	Seventh latest NG data	1 byte
10	Data of subcategory for the third latest NG	1 byte	26	Data of subcategory for the seventh latest NG	1 byte
11	Data of MR hour meter for the third latest NG	7 bytes	27	Data of MR hour meter for the seventh latest NG	7 bytes
12	Data on temperature for the third latest NG (TEMP2)	3 bytes	28	Data on temperature for the seventh latest NG (TEMP2)	3 bytes
13	Fourth latest NG data	1 byte	29	Eighth latest NG data	1 byte
14	Data of subcategory for the fourth latest NG	1 byte	30	Data of subcategory for the eighth latest NG	1 byte
15	Data of MR hour meter for the fourth latest NG	7 bytes	31	Data of MR hour meter for the eighth latest NG	7 bytes
16	Data on temperature for the fourth latest NG (TEMP2)	3 bytes	32	Data on temperature for the eighth latest NG (TEMP2)	3 bytes

- **Details on the NG data**

Data	Cause of Shutdown
0	No abnormality
1	Power-down of the MR power supply
2	Communication failure of the module microcomputer
3	Three-wire serial communication failure of the main microcomputer
4	IIC communication failure of the main microcomputer
5	Communication failure of the main microcomputer
6	MR having abnormally high temperature
7	Fan stopped
8	Failure in the digital tuner
9	Abnormality in RST2 of the MR (power decrease of DC-DC converter)

- **Data on the subcategories for failure in 3-wire serial communication of the main microcomputer**

Data	Cause of Shutdown
0	No subcategory
1	Communication failure of the IF microcomputer
2	IC2 communication failure
3	IC3 communication failure

- **Data on the subcategories for failure in the digital tuner**

Data	Cause of Shutdown
0	No subcategory (DTV for North America)
1	Communication failure of the BSD microcomputer (PS/RST)
2	BSD microcomputer (RETRY)
3	BSD unit (DEVICE)
4	PC CARD
5	
6	

- **Data on the subcategories for failure in IIC communication of the main microcomputer**

Data	Cause of Shutdown
0	No subcategory
1	EEPROM (128k) (IC7205)
2	GCR (Only domestic model)
3	IC1 main (IC6107)
4	IC1 sub (IC6255)
5	AD-PLL main (IC6402)
6	AD-PLL sub (IC6602)
7	IC6 (IC6951)
8	HDMI1
9	Not used
A	7-3VIDEO SW (IC8002)
B	6-2RGB SW (IC8005)
C	Front end 1 (U7501)
D	Not used
E	Not used
F	Not used
G	Not used
H	Not used
I	NICAM-NG (IC7702)
K	TX-COM (IC8904)
L	TX-DEV (IC8904)
M	TX-MEM (IC8904 or IC9101 or IC9104)

GAJ: Returning drive-related adjustment values of the PDP

Order	Data	Size
1	Currently used ABL table	3 bytes
2	Upper limit of the electric power	3 bytes
3	Vsus adjustment value	3 bytes
4	Vofs adjustment value	3 bytes
5	X-SUS-U1 adjustment value (XU1)	3 bytes
6	X-SUS-U2 adjustment value (XU2)	3 bytes
7	X-SUS-D2 adjustment value (XD2)	3 bytes
8	X-SUS-D1 adjustment value (XD1)	3 bytes
9	Y-SUS-U1 adjustment value (YU1)	3 bytes
10	Y-SUS-U2 adjustment value (YU2)	3 bytes
11	Y-SUS-D1-2 adjustment value (YD2)	3 bytes
12	Y-SUS-D1-1 adjustment value (YD1)	3 bytes
13	Y-SUS-D2-2 adjustment value (YD4)	3 bytes
14	Y-SUS-D2-1 adjustment value (YD3)	3 bytes

Data	Table
AB1	ABL table for NTSC
AB2	ABL table for PAL
AB3	ABL table for PC

GPW: Returning RGB-level-related adjustment values of the PDP

Order	Data	Size
1	Panel W/B table currently used	3 bytes
2	Main contrast	4 bytes
3	Red contrast of the W/B adjustment value	4 bytes
4	Green contrast of the W/B adjustment value	4 bytes
5	Blue contrast of the W/B adjustment value	4 bytes
6	Main brightness	4 bytes
7	Red brightness of the W/B adjustment value	4 bytes
8	Green brightness of the W/B adjustment value	4 bytes
9	Blue brightness of the W/B adjustment value	4 bytes

Data	Table
PT1	ABL table for NTSC
PT2	ABL table for PAL
PT3	Reserved table

7. GENERAL INFORMATION

7.1 DIAGNOSIS

7.1.1 TROUBLE SHOOTING

● Image for the composite or S signal is not displayed

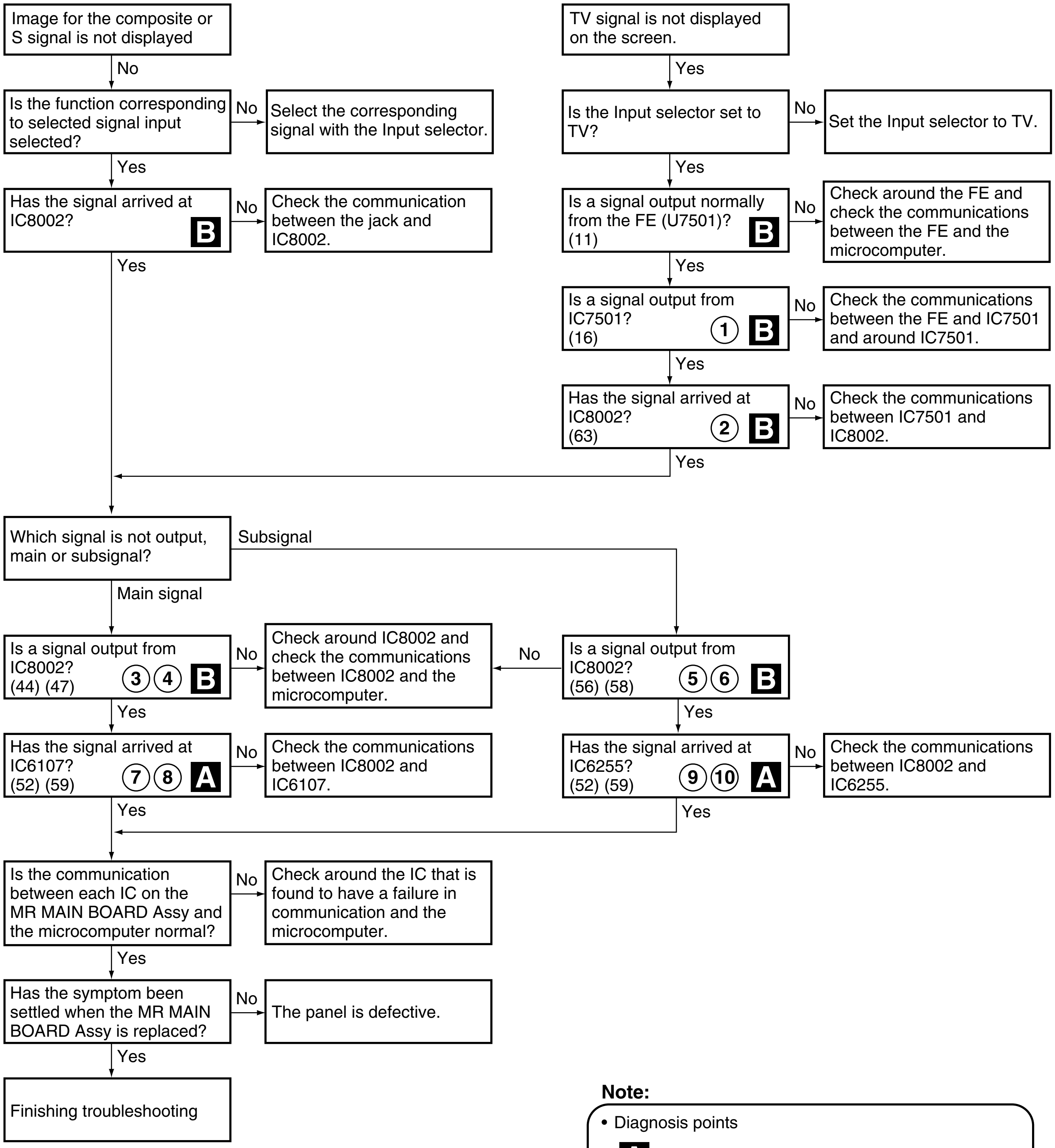
Image for the composite or S signal is not displayed
No
Is the function corresponding to selected signal input selected?
No
Select the corresponding signal with the Input selector.
Yes
Has the signal arrived at IC8002? B
No
Check the communication between the jack and IC8002.
Yes
TV signal is not displayed on the screen.
Yes
Is the Input selector set to TV?
No
Set the Input selector to TV.
Yes
Is a signal output normally from the FE (U7501)? (11) B
No
Check around the FE and check the communications between the FE and the microcomputer.
Yes
Is a signal output from IC7501? (16) ① B
No
Check the communications between the FE and IC7501 and around IC7501.
Yes
Has the signal arrived at IC8002? (63) ② B
No
Check the communications between IC7501 and IC8002.
Yes
Which signal is not output, main or subsignal?
Subsignal
Main signal
Is a signal output from IC8002? (44) (47) ③ ④ B
No
Check around IC8002 and check the communications between IC8002 and the microcomputer.
No
Is a signal output from IC8002? (56) (58) ⑤ ⑥ B
Yes
Has the signal arrived at IC6107? (52) (59) ⑦ ⑧ A
No
Check the communications between IC8002 and IC6107.
Yes
Has the signal arrived at IC6255? (52) (59) ⑨ ⑩ A
No
Check the communications between IC8002 and IC6255.
Yes
Yes
Is the communication between each IC on the MR MAIN BOARD Assy and the microcomputer normal?
No
Check around the IC that is found to have a failure in communication and the microcomputer.
Yes
Has the symptom been settled when the MR MAIN BOARD Assy is replaced?
No
The panel is defective.
Yes
Finishing troubleshooting

Note:

- Diagnosis points

  A MR MAIN BOARD ASSY

  B AV BOARD ASSY

- For check the communication with the microcomputer, refer to the section 6.7 SERVICE FACTORY MODE.
- The encircled numbers denote measuring point in the Waveforms for Troubleshooting.

● MONITOR OUT image is not displayed

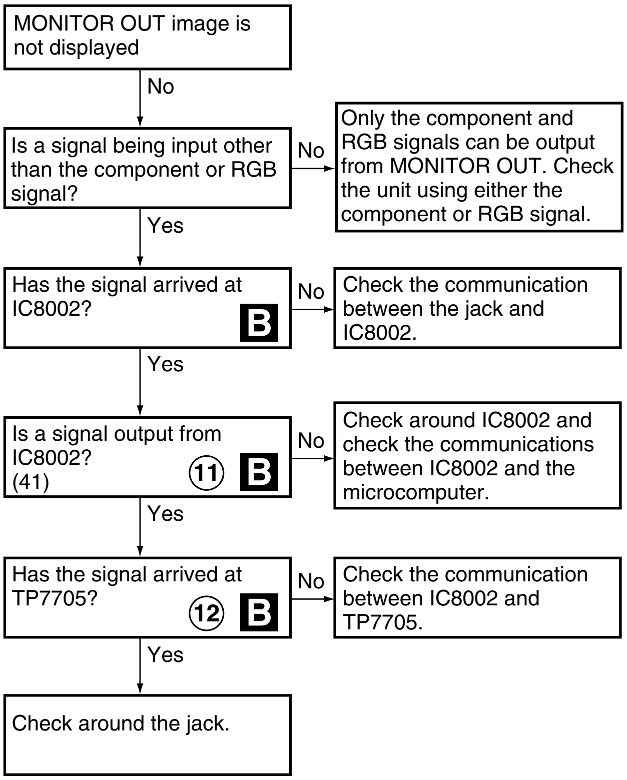
MONITOR OUT image is not displayed
No
Is a signal being input other than the component or RGB signal?
No
Only the component and RGB signals can be output from MONITOR OUT. Check the unit using either the component or RGB signal.
Yes
Has the signal arrived at IC8002?
B
No
Check the communication between the jack and IC8002.
Yes
Is a signal output from IC8002? (41)
⑪
B
No
Check around IC8002 and check the communications between IC8002 and the microcomputer.
Yes
Has the signal arrived at TP7705?
⑫
B
No
Check the communication between IC8002 and TP7705.
Yes
Check around the jack.

● Image for the component or RGB signals is not displayed

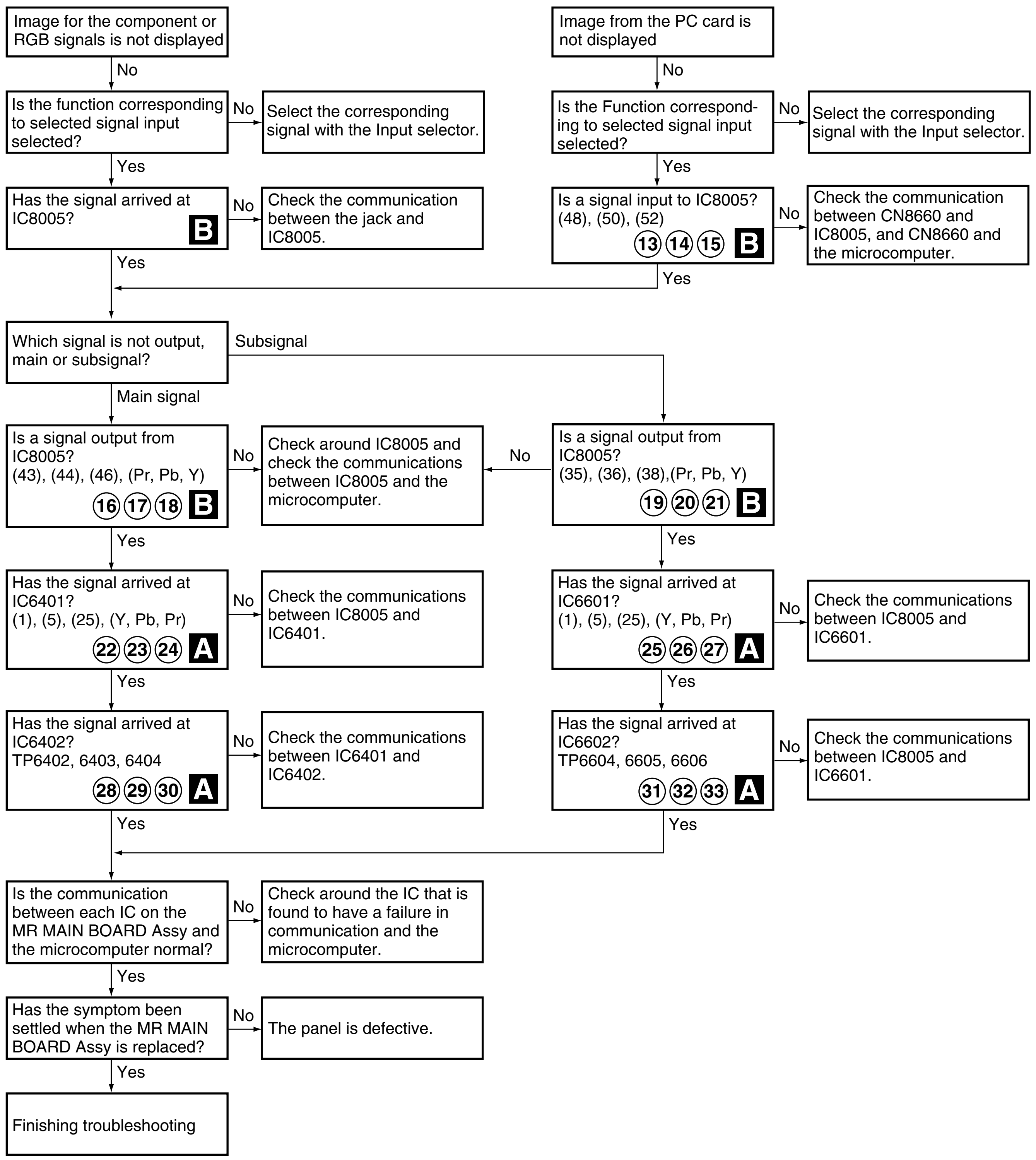
Image for the component or RGB signals is not displayed
No
Is the function corresponding to selected signal input selected?
No
Select the corresponding signal with the Input selector.
Yes
Has the signal arrived at IC8005?
B
No
Check the communication between the jack and IC8005.
Yes
Image from the PC card is not displayed
No
Is the Function corresponding to selected signal input selected?
No
Select the corresponding signal with the Input selector.
Yes
Is a signal input to IC8005? (48), (50), (52)
⑬ ⑭ ⑮ B
No
Check the communication between CN8660 and IC8005, and CN8660 and the microcomputer.
Yes
Which signal is not output, main or subsignal?
Subsignal
Main signal
Is a signal output from IC8005? (43), (44), (46), (Pr, Pb, Y)
⑯ ⑰ ⑱ B
No
Check around IC8005 and check the communications between IC8005 and the microcomputer.
No
Is a signal output from IC8005? (35), (36), (38),(Pr, Pb, Y)
⑲ ⑳ ㉑ B
Yes
Has the signal arrived at IC6401? (1), (5), (25), (Y, Pb, Pr)
㉒ ㉓ ㉔ A
No
Check the communications between IC8005 and IC6401.
Yes
Has the signal arrived at IC6601? (1), (5), (25), (Y, Pb, Pr)
㉕ ㉖ ㉗ A
No
Check the communications between IC8005 and IC6601.
Yes
Has the signal arrived at IC6402? TP6402, 6403, 6404
㉘ ㉙ ㉚ A
No
Check the communications between IC6401 and IC6402.
Yes
Has the signal arrived at IC6602? TP6604, 6605, 6606
㉛ ㉜ ㉝ A
No
Check the communications between IC8005 and IC6601.
Yes
Yes
Is the communication between each IC on the MR MAIN BOARD Assy and the microcomputer normal?
No
Check around the IC that is found to have a failure in communication and the microcomputer.
Yes
Has the symptom been settled when the MR MAIN BOARD Assy is replaced?
No
The panel is defective.
Yes
Finishing troubleshooting

● No sound from the headphones

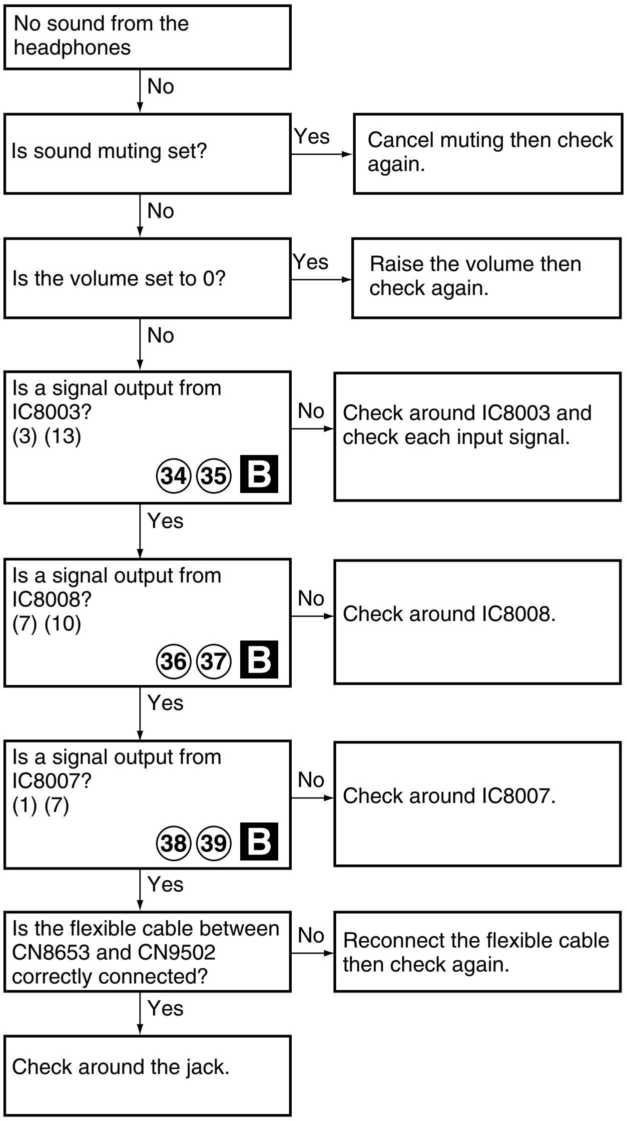
No sound from the headphones
No
Is sound muting set?
Yes
Cancel muting then check again.
No
Is the volume set to 0?
Yes
Raise the volume then check again.
No
Is a signal output from IC8003? (3) (13) ㉞ ㉟ B
No
Check around IC8003 and check each input signal.
Yes
Is a signal output from IC8008? (7) (10) ㊱ ㊲ B
No
Check around IC8008.
Yes
Is a signal output from IC8007? (1) (7) ㊳ ㊴ B
No
Check around IC8007.
Yes
Is the flexible cable between CN8653 and CN9502 correctly connected?
No
Reconnect the flexible cable then check again.
Yes
Check around the jack.

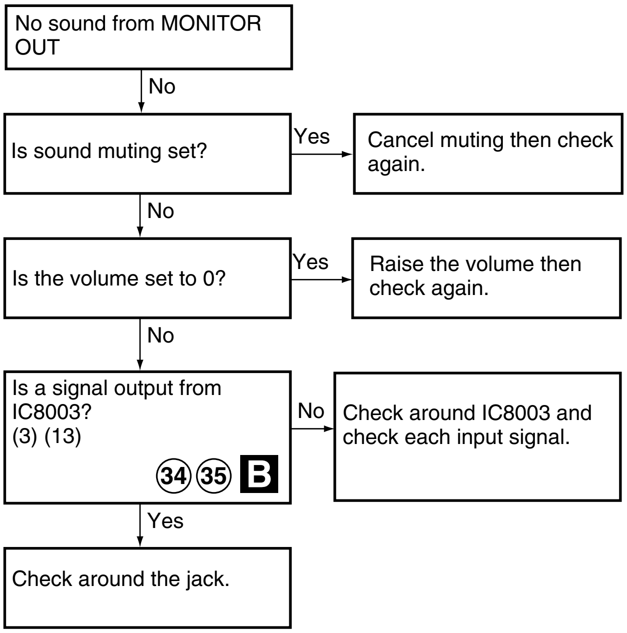
No sound from MONITOR OUT
No
Is sound muting set?
Yes
Cancel muting then check again.
No
Is the volume set to 0?
Yes
Raise the volume then check again.
No
Is a signal output from IC8003? (3) (13) ㉞ ㉟ B
No
Check around IC8003 and check each input signal.
Yes
Check around the jack.

● No sound from the speakers (1/2)

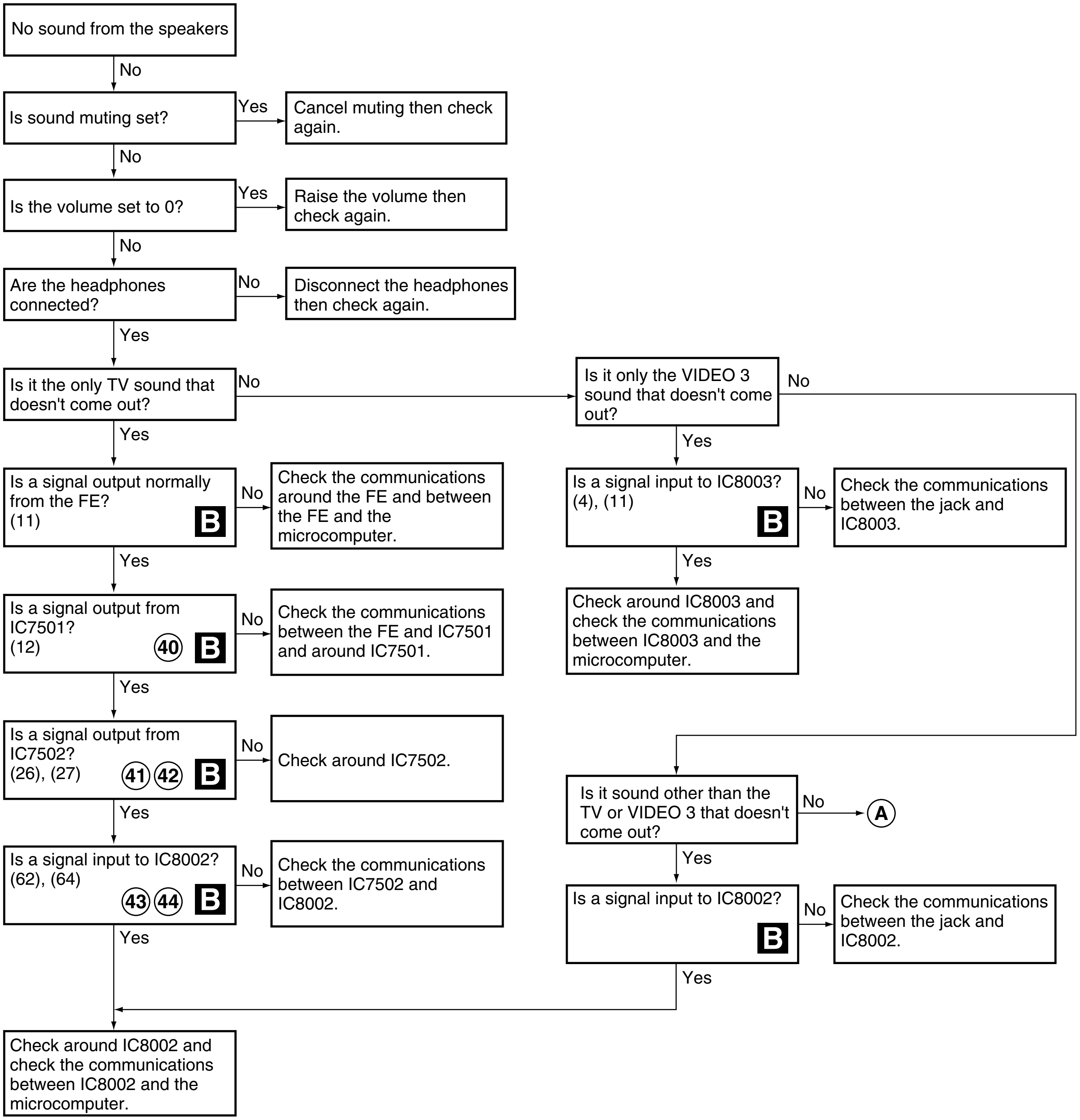
No sound from the speakers
No
Is sound muting set?
Yes
Cancel muting then check again.
No
Is the volume set to 0?
Yes
Raise the volume then check again.
No
Are the headphones connected?
No
Disconnect the headphones then check again.
Yes
Is it the only TV sound that doesn't come out?
No
Is it only the VIDEO 3 sound that doesn't come out?
No
Yes
Is a signal output normally from the FE? (11)
B
No
Check the communications around the FE and between the FE and the microcomputer.
Yes
Is a signal output from IC7501? (12)
40
B
No
Check the communications between the FE and IC7501 and around IC7501.
Yes
Is a signal output from IC7502? (26), (27)
41
42
B
No
Check around IC7502.
Yes
Is a signal input to IC8002? (62), (64)
43
44
B
No
Check the communications between IC7502 and IC8002.
Yes
Check around IC8002 and check the communications between IC8002 and the microcomputer.
Yes
Is a signal input to IC8003? (4), (11)
B
No
Check the communications between the jack and IC8003.
Yes
Check around IC8003 and check the communications between IC8003 and the microcomputer.
Is it sound other than the TV or VIDEO 3 that doesn't come out?
No
A
Yes
Is a signal input to IC8002?
B
No
Check the communications between the jack and IC8002.
Yes

● No sound from the speakers (2/2)

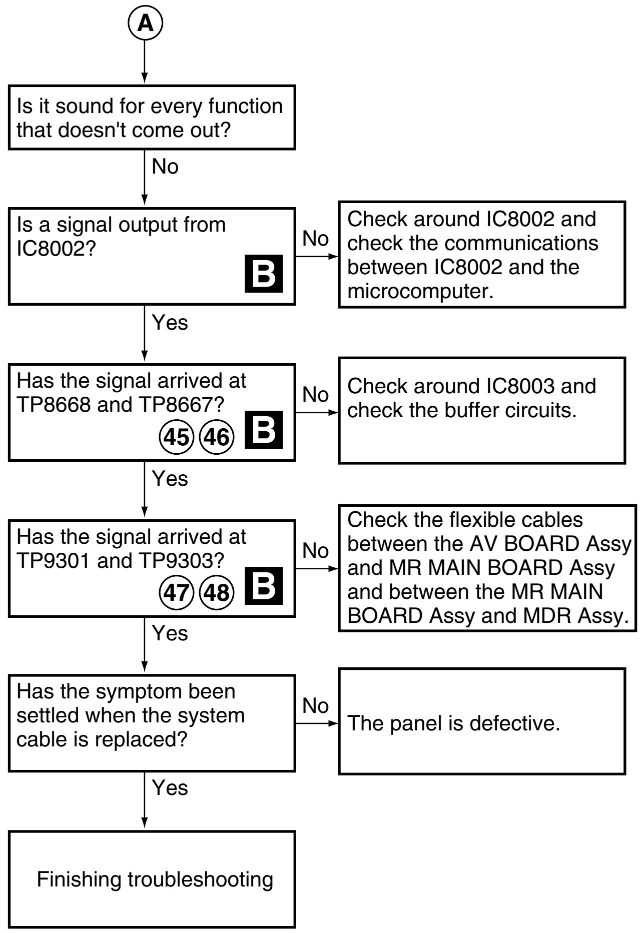
A
Is it sound for every function that doesn't come out?
No
Is a signal output from IC8002?
B
No
Check around IC8002 and check the communications between IC8002 and the microcomputer.
Yes
Has the signal arrived at TP8668 and TP8667?
45 46
B
No
Check around IC8003 and check the buffer circuits.
Yes
Has the signal arrived at TP9301 and TP9303?
47 48
B
No
Check the flexible cables between the AV BOARD Assy and MR MAIN BOARD Assy and between the MR MAIN BOARD Assy and MDR Assy.
Yes
Has the symptom been settled when the system cable is replaced?
No
The panel is defective.
Yes
Finishing troubleshooting

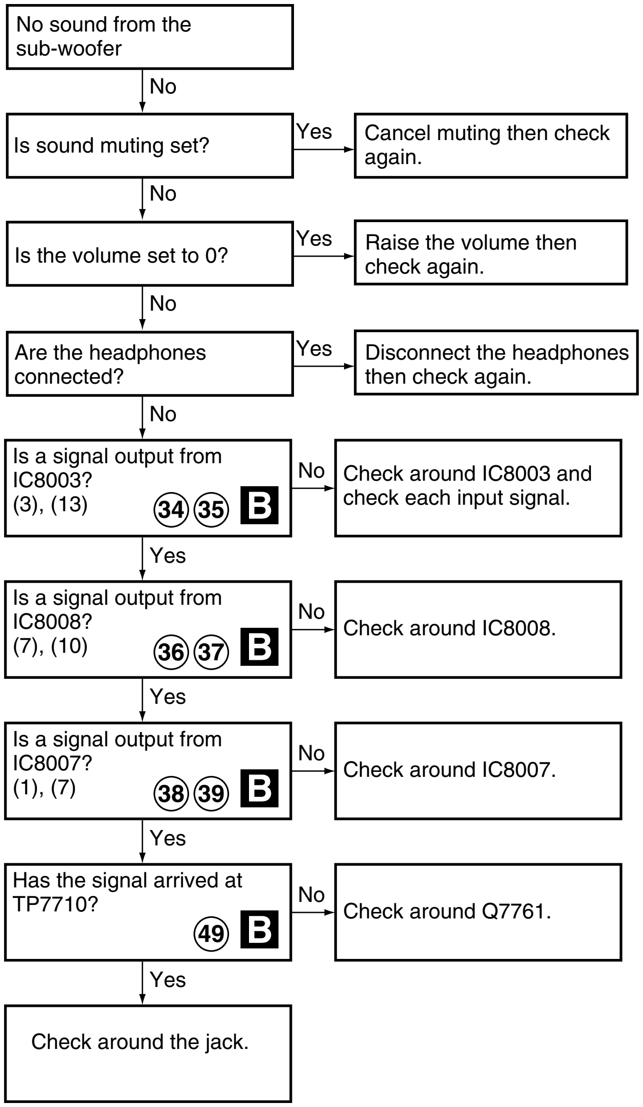
No sound from the sub-woofer
No
Is sound muting set?
Yes
Cancel muting then check again.
No
Is the volume set to 0?
Yes
Raise the volume then check again.
No
Are the headphones connected?
Yes
Disconnect the headphones then check again.
No
Is a signal output from IC8003? (3), (13)
34 35
B
No
Check around IC8003 and check each input signal.
Yes
Is a signal output from IC8008? (7), (10)
36 37
B
No
Check around IC8008.
Yes
Is a signal output from IC8007? (1), (7)
38 39
B
No
Check around IC8007.
Yes
Has the signal arrived at TP7710?
49
B
No
Check around Q7761.
Yes
Check around the jack.

① **IC7501 - pin 16**

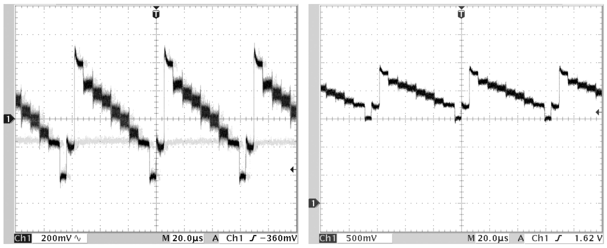

② **IC8002 - pin 63**

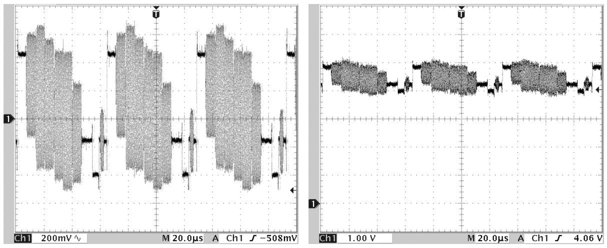

③ **IC8002 - pin 44**

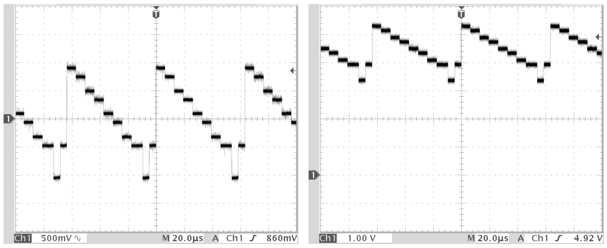

④ **IC8002 - pin 47**

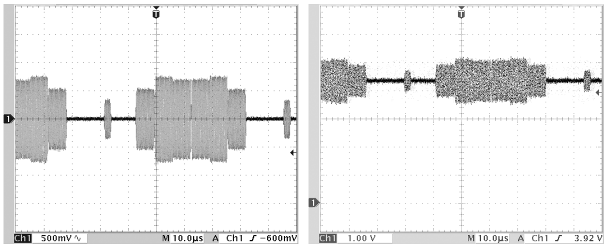

⑤ **IC8002 - pin 56**

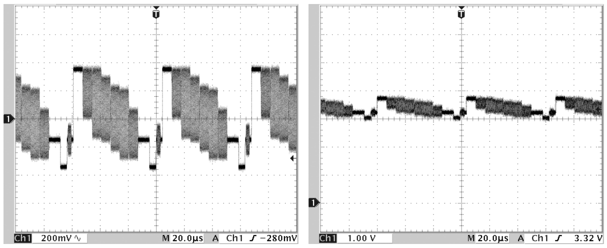

⑥ **IC8002 - pin 58**

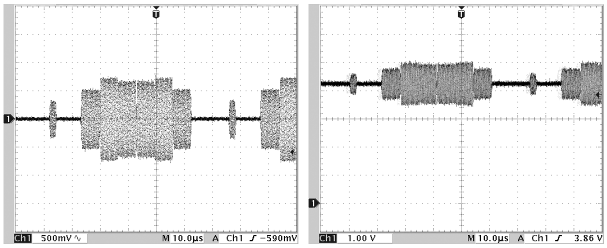

⑦ **IC6107 - pin 52**

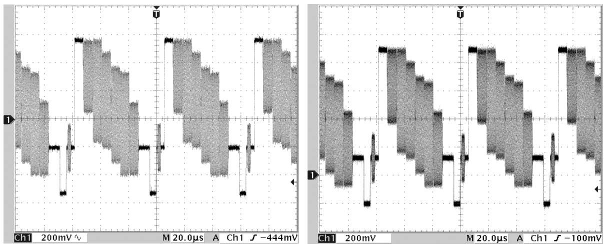

⑧ **IC6107 - pin 59**

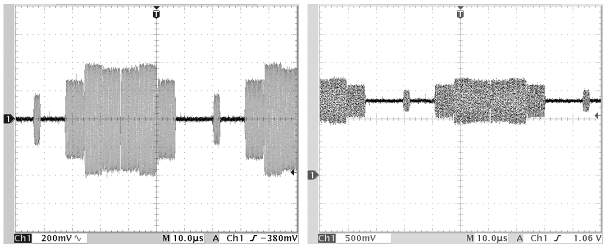

⑨ **IC6255 - pin 52**

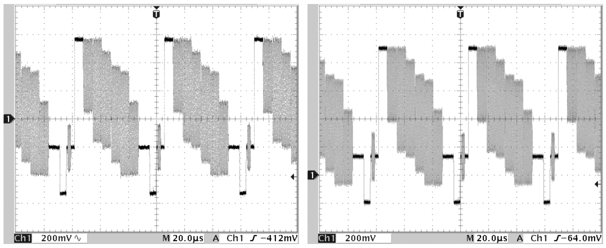

⑩ **IC6255 - pin 59**

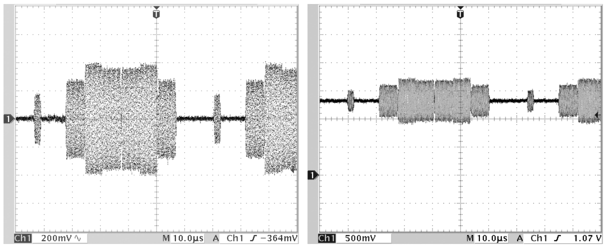

⑪ **IC8002 - pin 41**

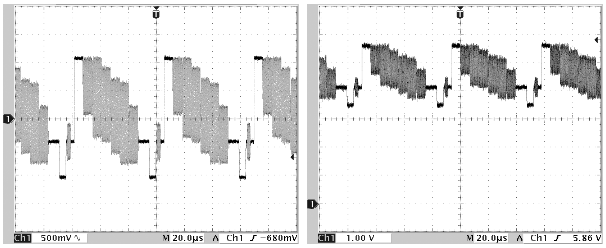

⑫ **TP7705**

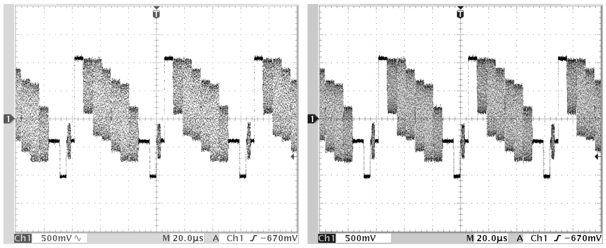

⑬ IC8005 - pin 48

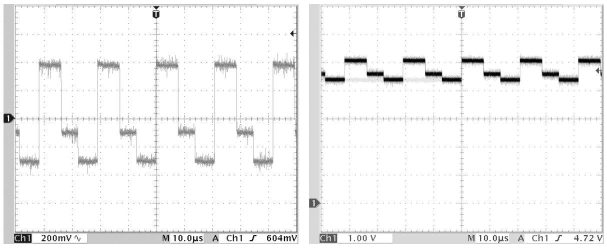

⑭ IC8005 - pin 50

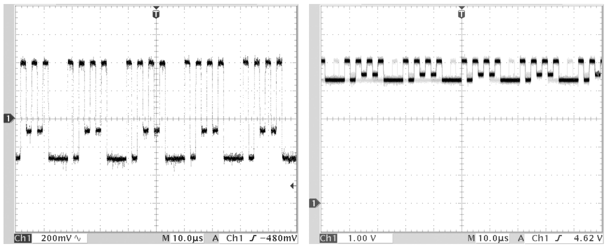

⑮ IC8005 - pin 52

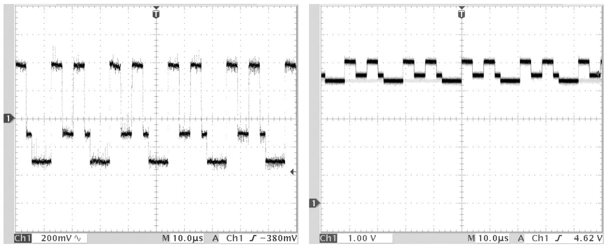

⑯ IC8005 - pin 43

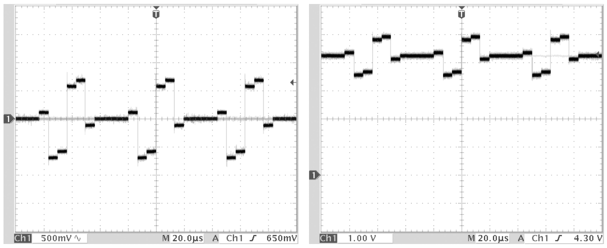

⑰ IC8005 - pin 44

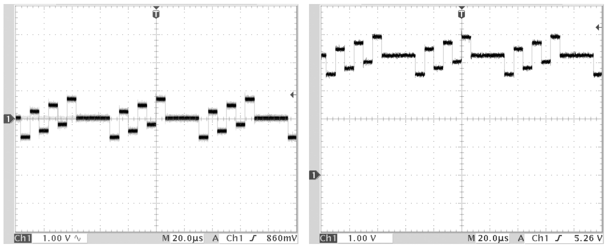

⑱ IC8005 - pin 46

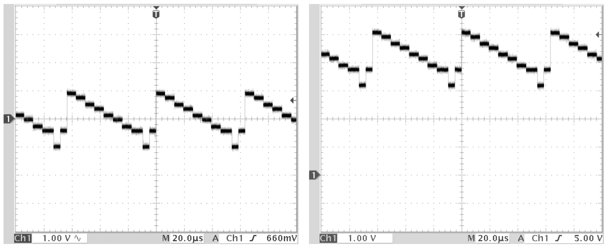

⑲ IC8005 - pin 35

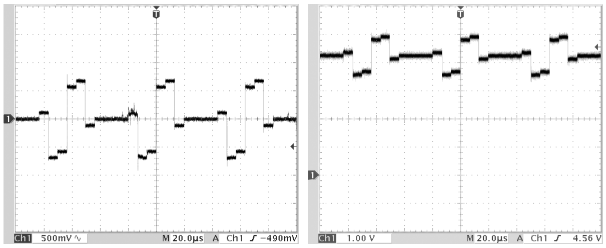

⑳ IC8005 - pin 36

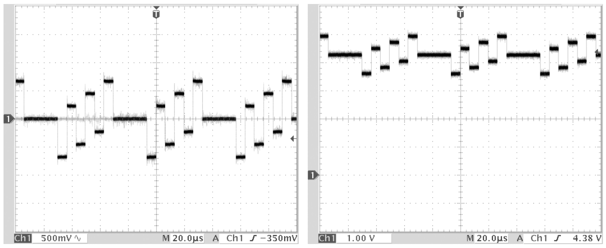

㉑ IC8005 - pin 38

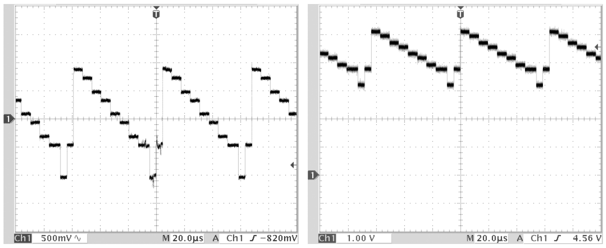

㉒ IC6401 - pin 1

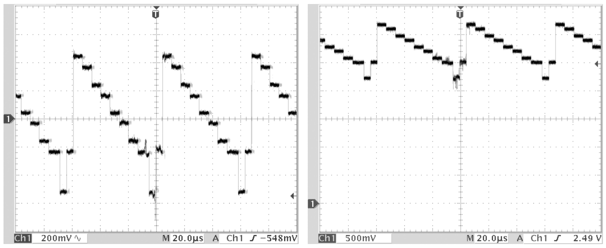

㉓ IC6401 - pin 5

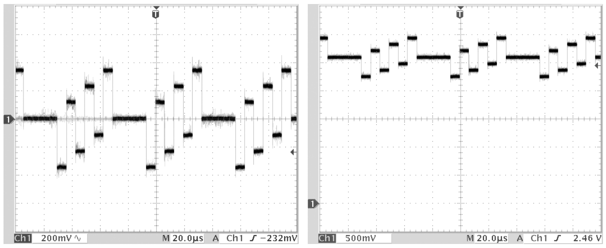

㉔ IC6401 - pin 25

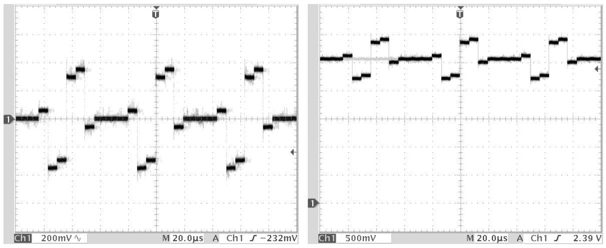

㉕ IC6601 - pin 1

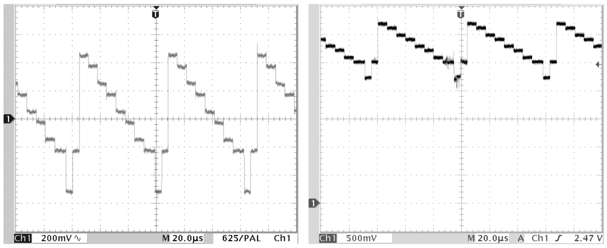

㉛ TP6604

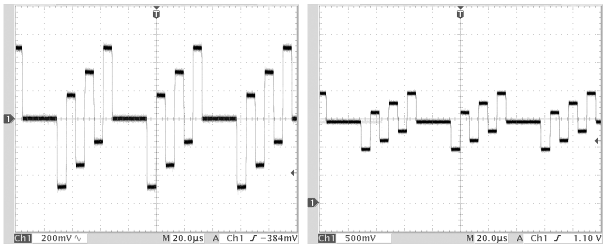

㉖ IC6601 - pin 5

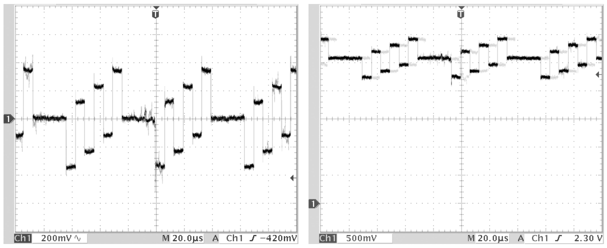

㉜ TP6605

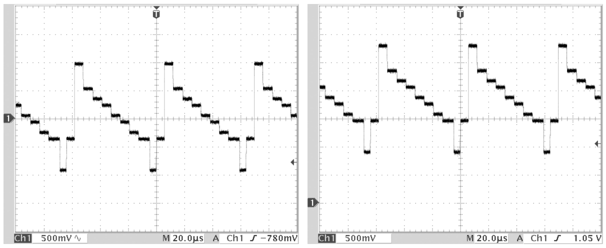

㉗ IC6601 - pin 25

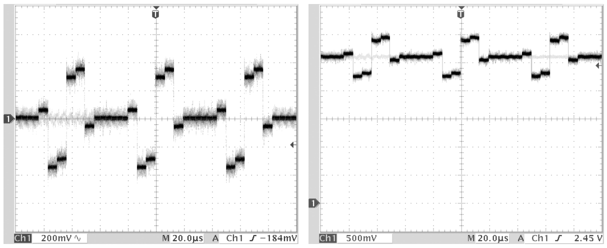

㉝ TP6606

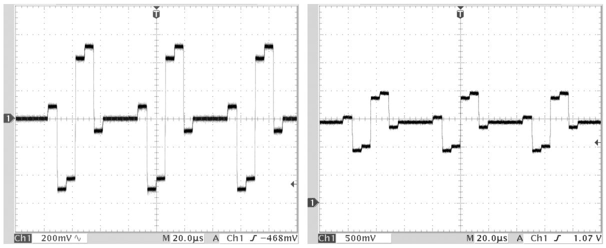

㉘ TP6402

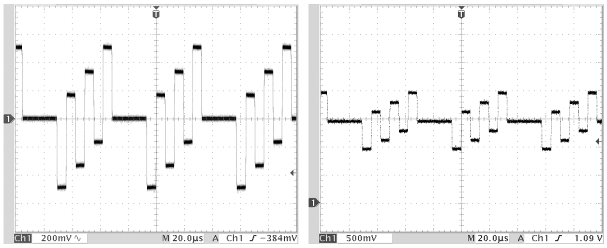

㉞ IC8003 - pin 3

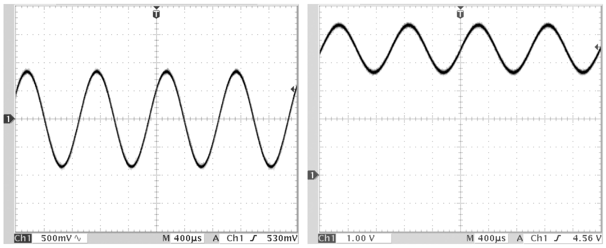

㉙ TP6403

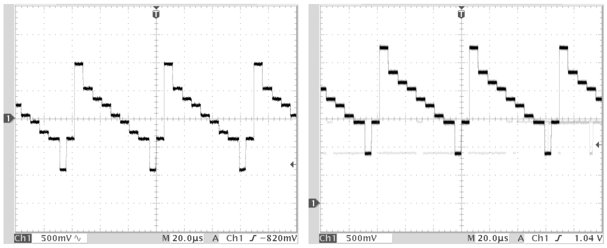

㉟ IC8003 - pin 13

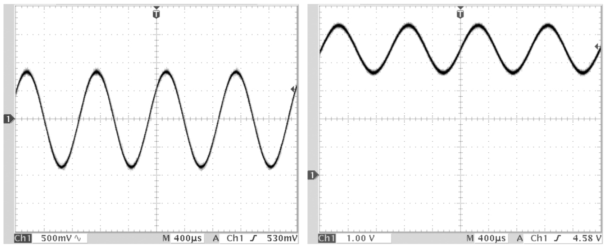

㉚ TP6404

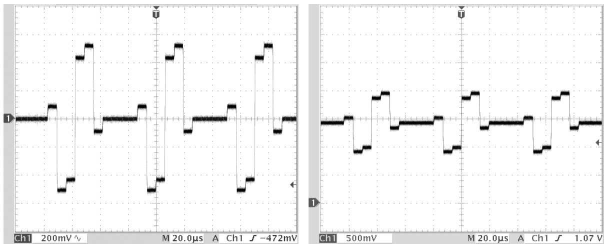

㊱ IC8006 - pin 7

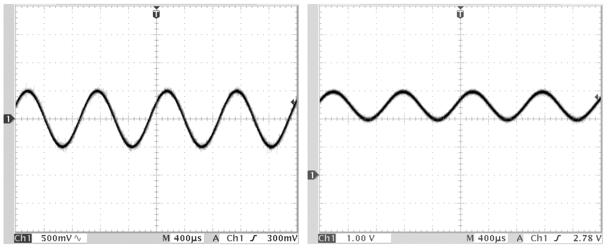

㊲ **IC8006 - pin 10**

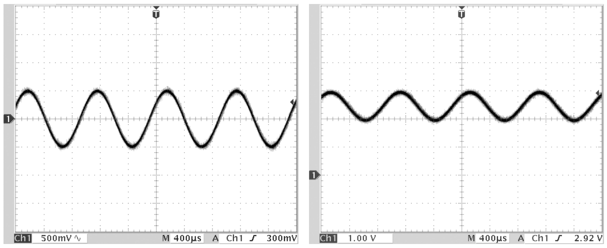

㊳ **IC8007 - pin 1**

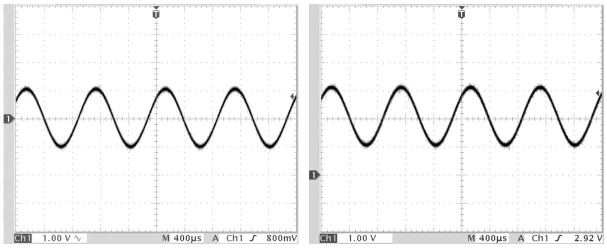

㊴ **IC8007 - pin 7**

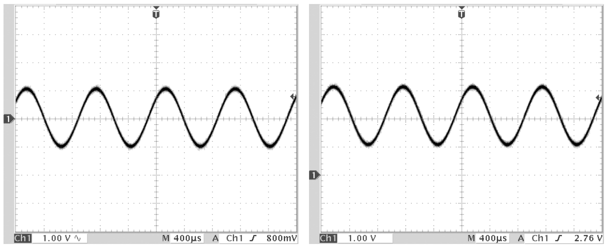

㊵ **IC7501 - pin 12**

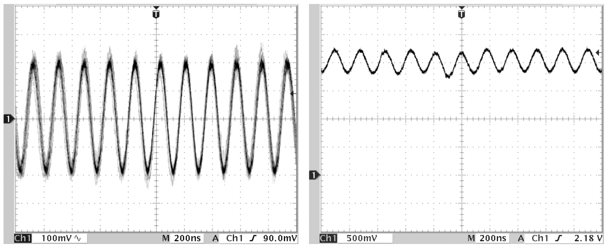

㊶ **IC7502 - pin 26**

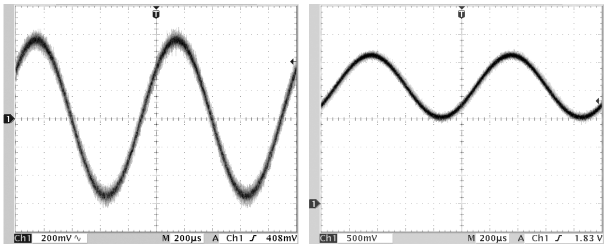

㊷ **IC7502 - pin 27**

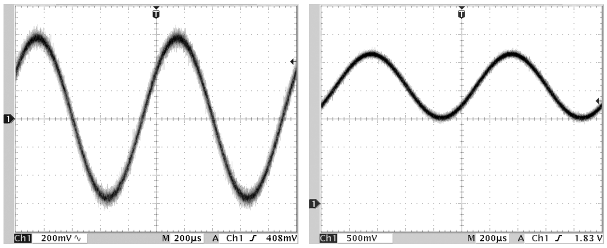

㊸ **IC8002 - pin 62**

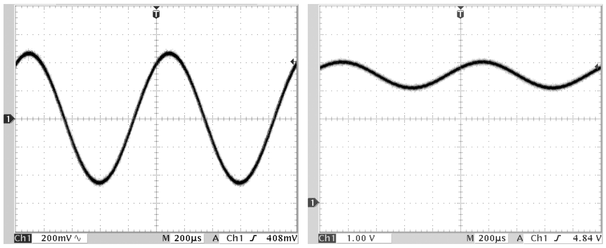

㊹ **IC8002 - pin 64**

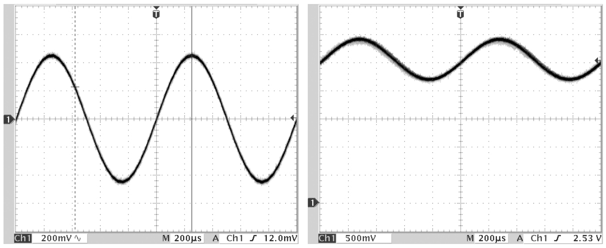

㊺ **TP8667**

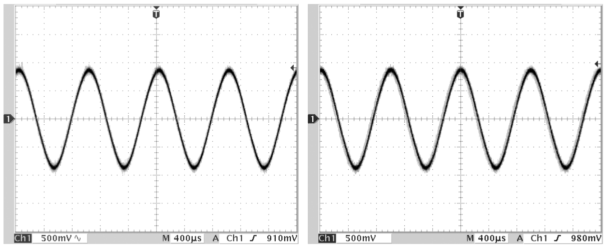

㊻ **TP8668**

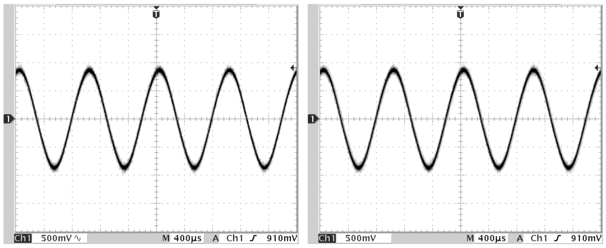

㊼ **TP9301**

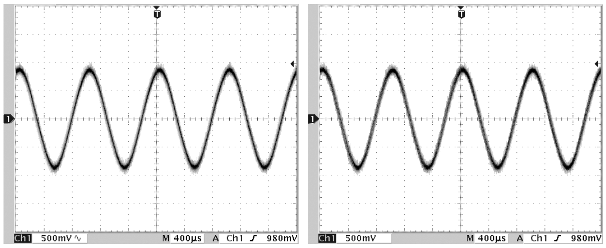

㊽ **TP9303**

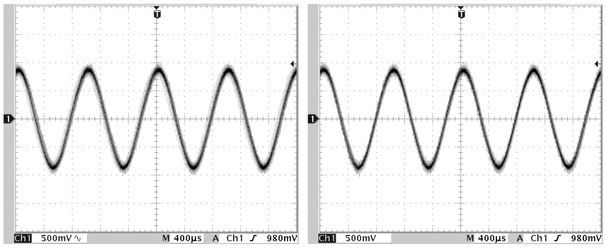

㊾ **TP7710**

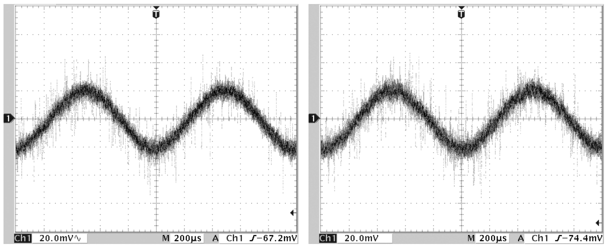

7.1.2 DISASSEMBLY

1 Metal bonnet top and bottom

① Remove the metal bonnet top by removing the six screws.

② Remove the metal bonnet bottom by removing the five screws.

Caution :
Please remove it after pulling it in a rear direction because metal bonnet top and bottom are hard to reduce.

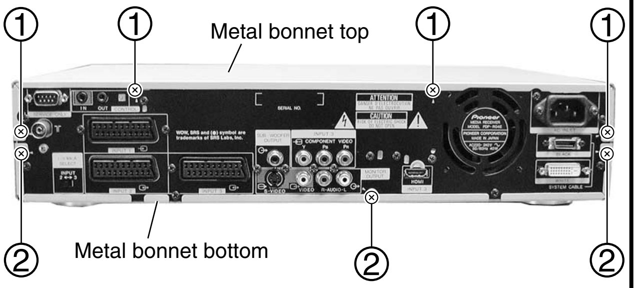
①
①
Metal bonnet top
①
①
②
Metal bonnet bottom
②
②

● **Rear view**

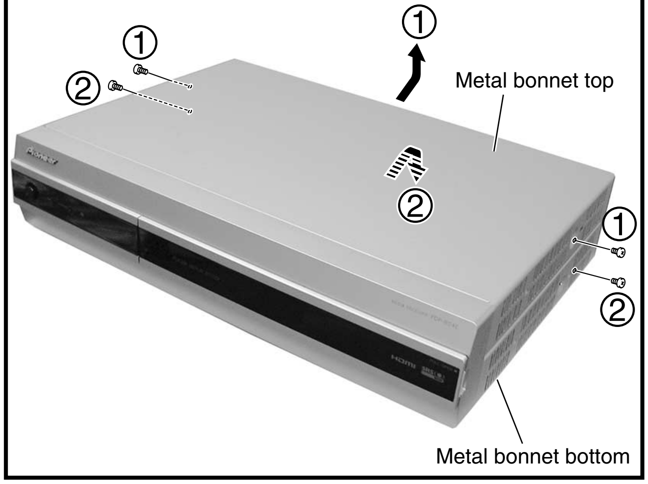
①
②
①
Metal bonnet top
②
①
②
Metal bonnet bottom

2 Front panel section

① Remove the four screws.

② Disconnect the one connector.

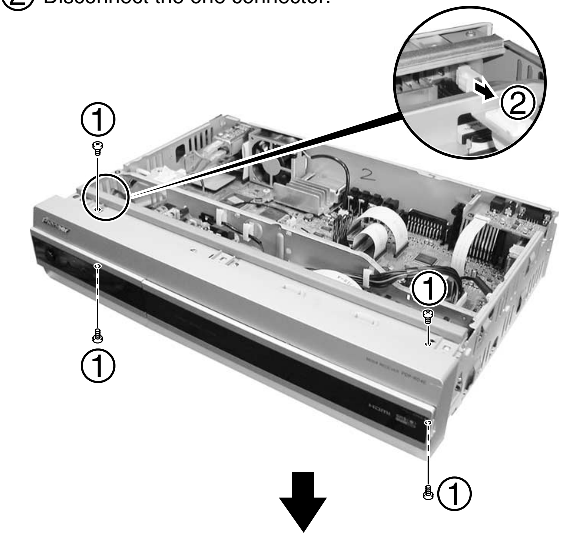

③ Remove the six hooks.

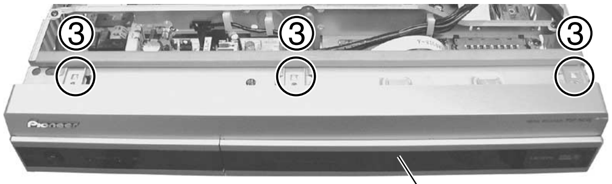

● **Top view**

Front panel section

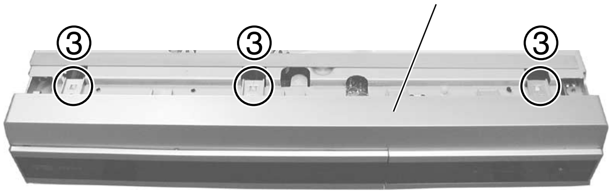

● **Bottom view**

④ Remove the front panel section.

⑤ Remove the AC SW Assy by removing the two screws.

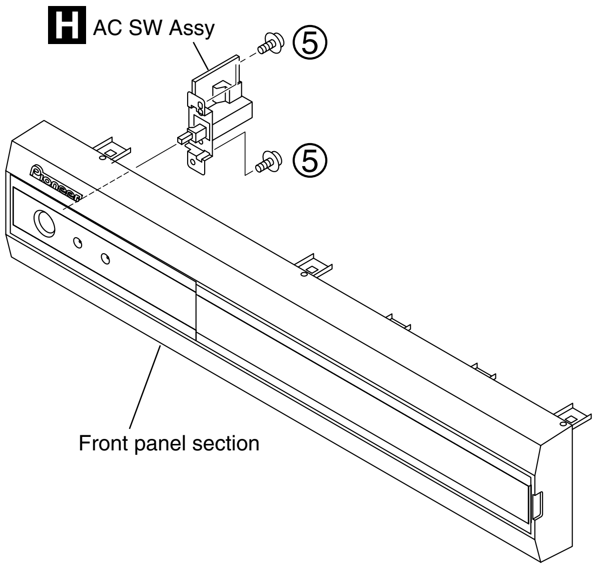
H AC SW Assy
⑤
⑤
Front panel section

3 Front shield A and Center stay

① Remove the front shield A by removing the ten screws.

② Disconnect the three connectors and the one flexible cable.

③ Remove styling of the two cables.
Remove styling of the one flexible cable.

④ Remove the center stay by removing the three screws.

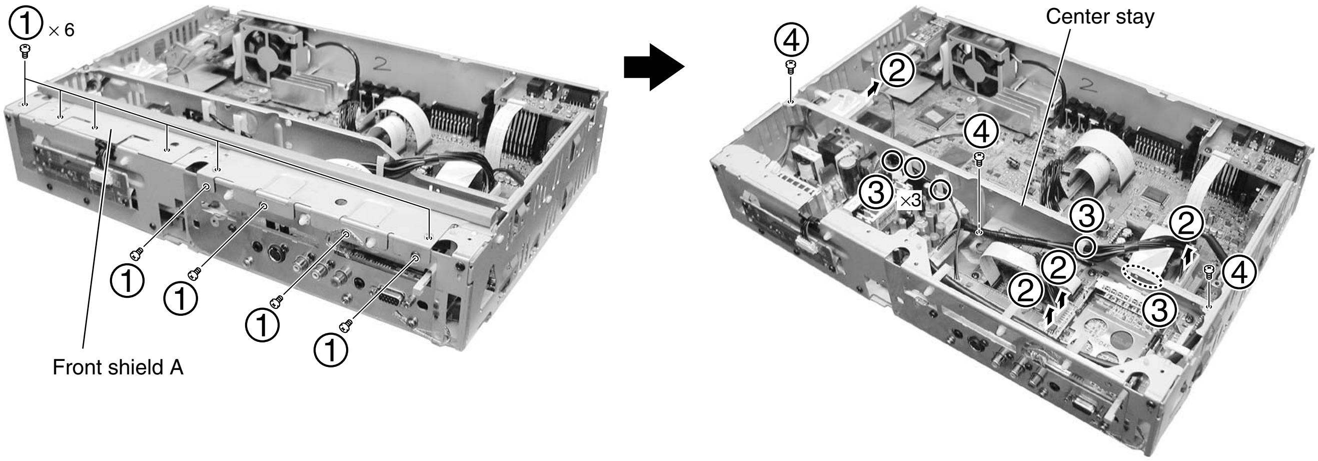

① × 6
①
①
①
①
Front shield A
④
②
④
③ ×3
Center stay
③
②
②
②
③
④

PCB Location

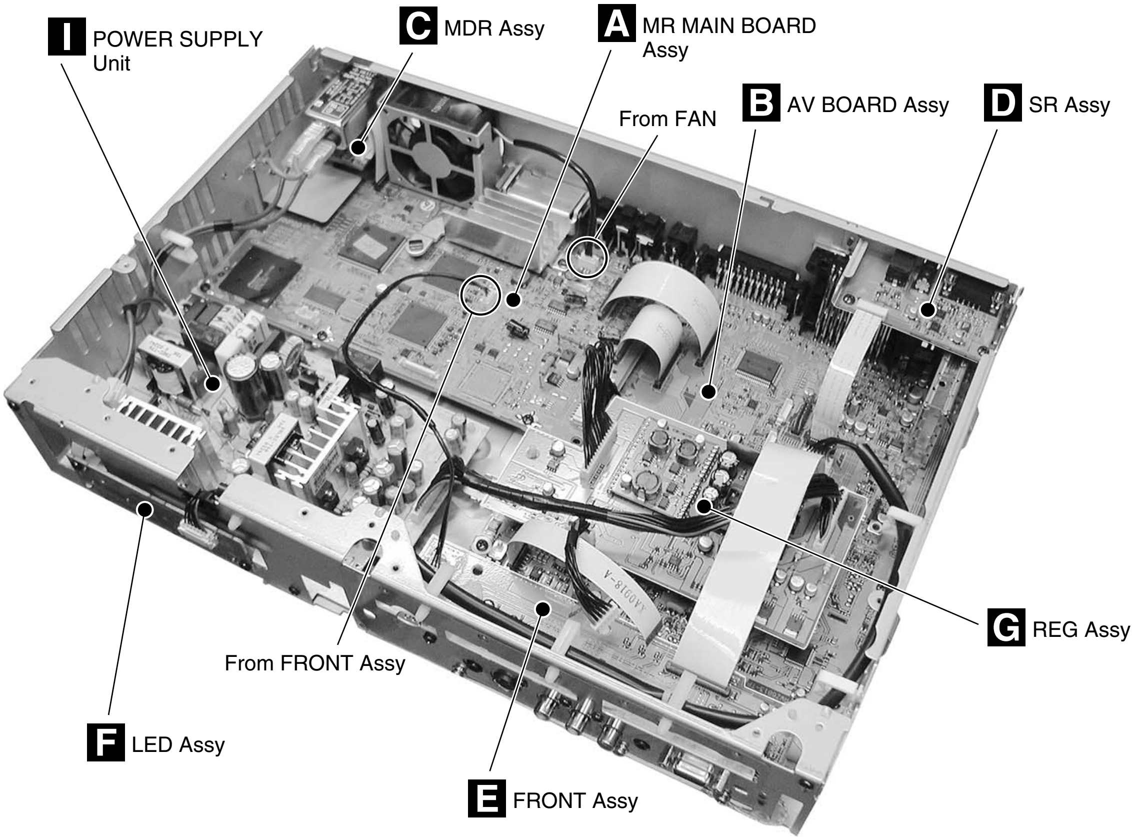

I POWER SUPPLY Unit
C MDR Assy
A MR MAIN BOARD Assy
From FAN
B AV BOARD Assy
D SR Assy
G REG Assy
From FRONT Assy
F LED Assy
E FRONT Assy

☞Cable Styling in the Assembly

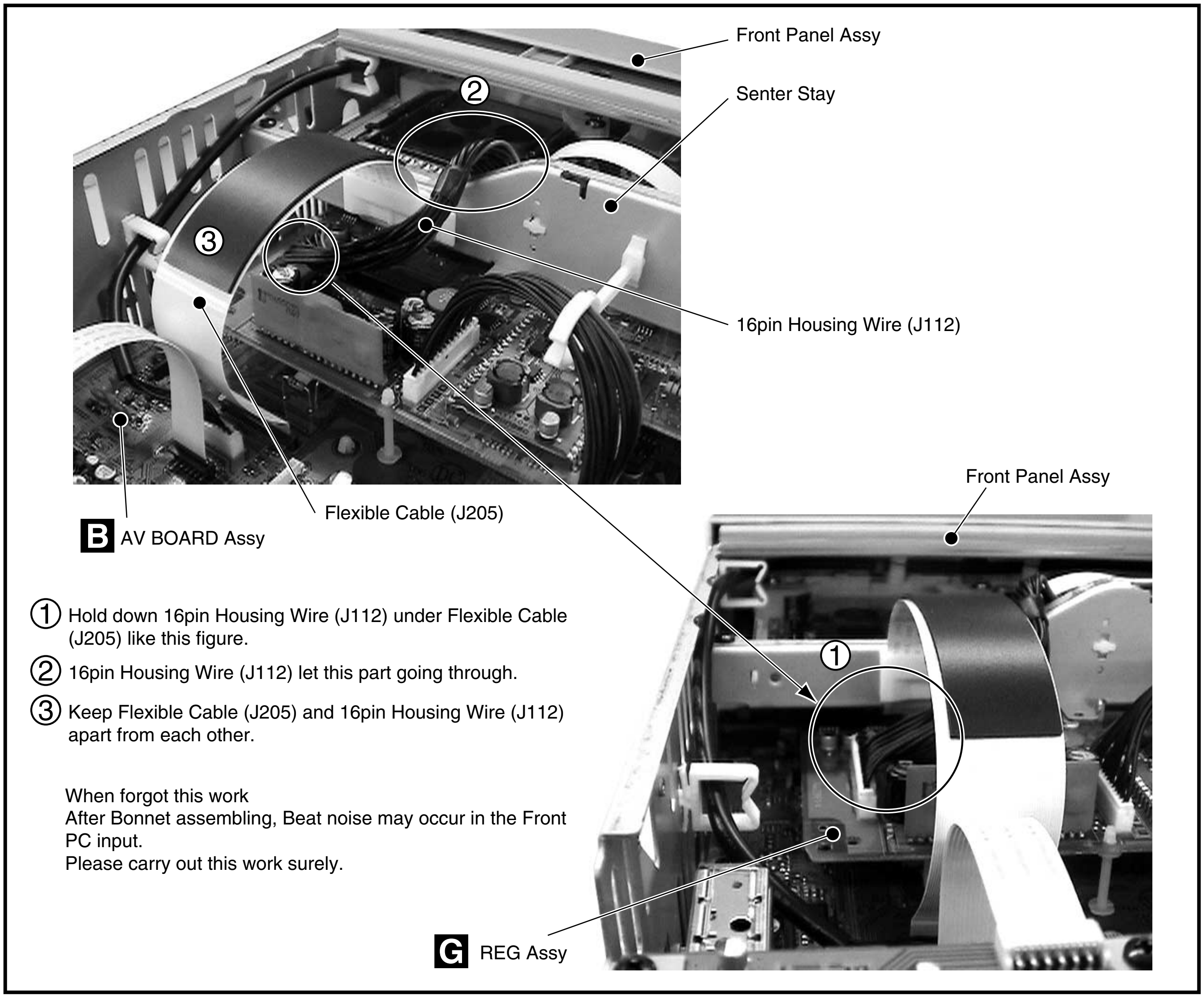
Front Panel Assy
Senter Stay
②
③
16pin Housing Wire (J112)
Flexible Cable (J205)
B AV BOARD Assy
Front Panel Assy
①
G REG Assy

① Hold down 16pin Housing Wire (J112) under Flexible Cable (J205) like this figure.

② 16pin Housing Wire (J112) let this part going through.

③ Keep Flexible Cable (J205) and 16pin Housing Wire (J112) apart from each other.

When forgot this work
After Bonnet assembling, Beat noise may occur in the Front PC input.
Please carry out this work surely.

7.2 EXPLANATION

7.2.1 PROCESSING IN ABNORMALITY (TRAP SW)

TRAP_SW

● Circuit diagram

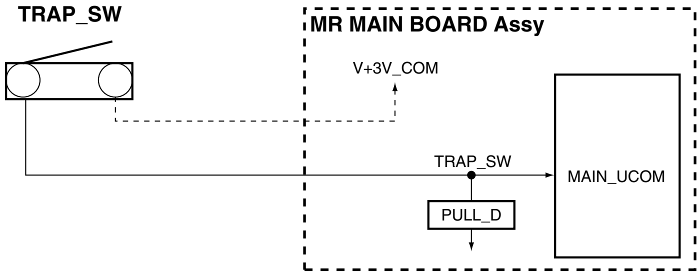
TRAP_SW
MR MAIN BOARD Assy
V+3V_COM
TRAP_SW
MAIN_UCOM
PULL_D

● Specifications for port monitoring

Port Name	SD/PD Indication	Assigned Pin	Active
TRAP_SW	Modification tried	30	OFF with H

7.2.2 PROCESSING IN ABNORMALITY

Power supply and DC-DC converter

- **Circuit diagram**

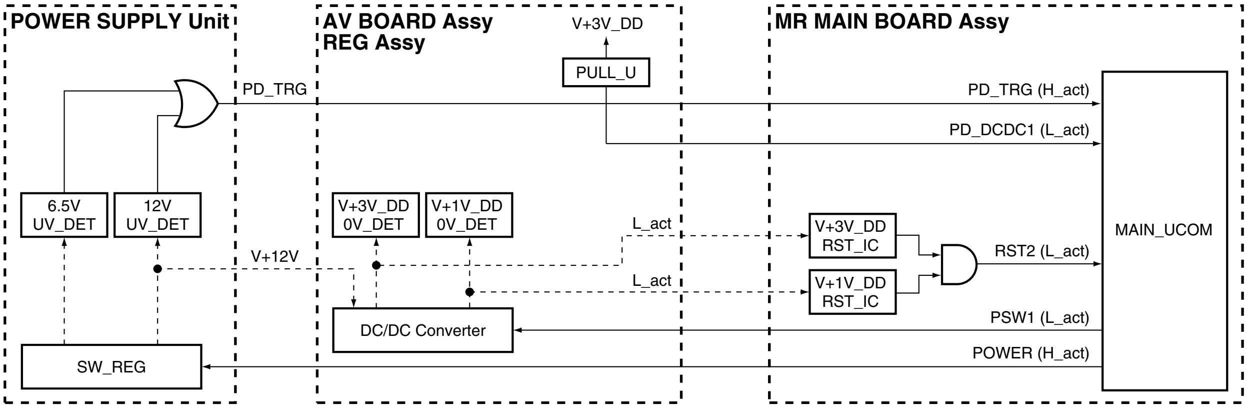
POWER SUPPLY Unit
AV BOARD Assy
REG Assy
MR MAIN BOARD Assy
V+3V_DD
PULL_U
PD_TRG
PD_TRG (H_act)
PD_DCDC1 (L_act)
6.5V UV_DET
12V UV_DET
V+3V_DD 0V_DET
V+1V_DD 0V_DET
L_act
V+3V_DD RST_IC
V+1V_DD RST_IC
RST2 (L_act)
MAIN_UCOM
V+12V
L_act
DC/DC Converter
PSW1 (L_act)
SW_REG
POWER (H_act)

- **Specifications for port monitoring**

Port Name	SD/PD Indication	Assigned Pin	Active
PD_MAIN (PD_TRG)	MR_PWR	38	Power-down with H
PD_DCDC1	ASIC power supply	43	Shutdown with L
RST2	ASIC power supply	98	Shutdown with L

Fan and temperature sensor

- **Circuit diagram**

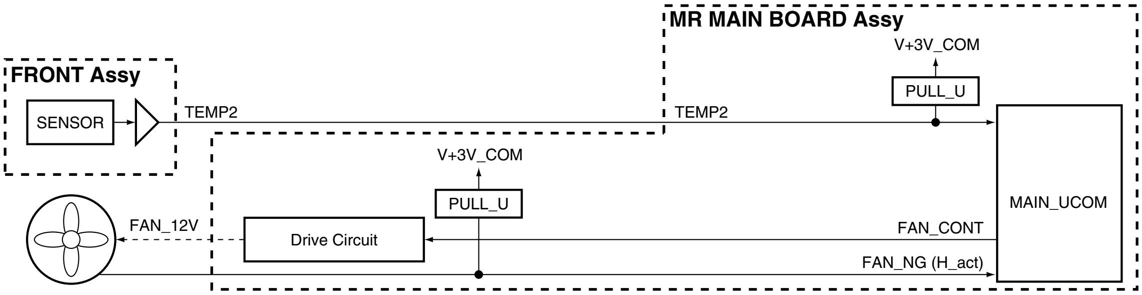
MR MAIN BOARD Assy
V+3V_COM
FRONT Assy
PULL_U
SENSOR
TEMP2
TEMP2
V+3V_COM
PULL_U
MAIN_UCOM
FAN_12V
Drive Circuit
FAN_CONT
FAN_NG (H_act)

- **Specifications for port monitoring**

Port Name	SD/PD Indication	Assigned Pin	Active
FAN_NG	FAN	31	Shutdown with H
TEMP2	Abnormally high temperature in the MR	50	Shutdown when the value exceeds the predetermined value

LED-lighting patterns

Status of the Unit		LED-lighting Pattern
Standby, power management	Lit in red	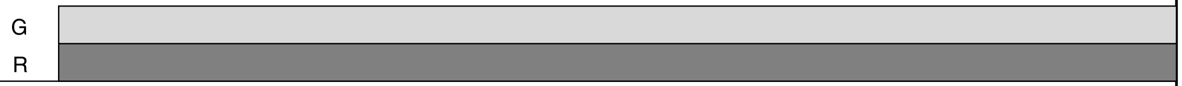
Power on	Lit in green	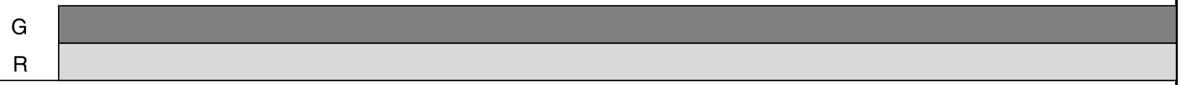
PDP's power not on	Flashing in red (at 1-sec intervals)	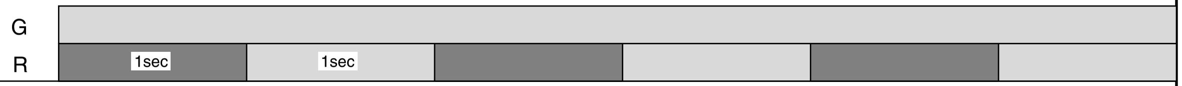 G R 1sec 1sec
System cable disconnected *	Flashing alternately in red and green (at 1-sec intervals)	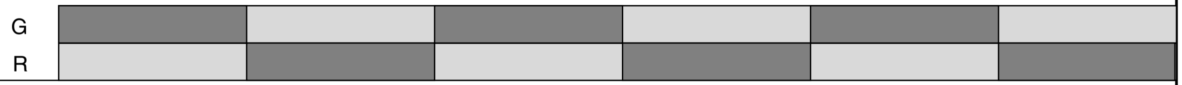
Waiting for start of rewriting by the microcomputer		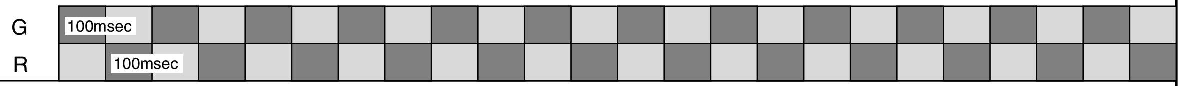 G R 100msec 100msec
Waiting for finish of rewriting by the microcomputer		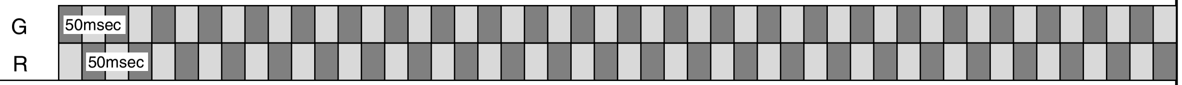 G R 50msec 50msec
Shutdown (circuit protection)	Flashing in green n times (initially at 0.5-sec intervals then 2.5-sec intervals)	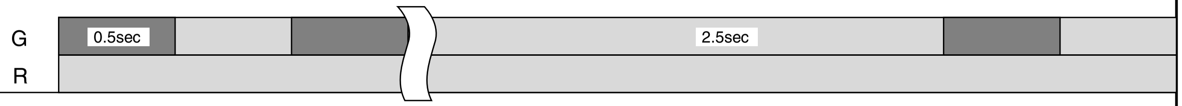 G R 0.5sec 2.5sec
Power-down (circuit protection)	Flashing in red for n times (initially at 0.5-sec intervals then 2.5-sec intervals)	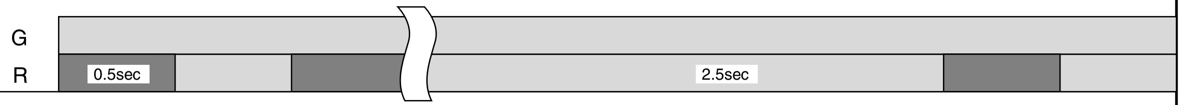 G R 0.5sec 2.5sec
TRAP switch operation		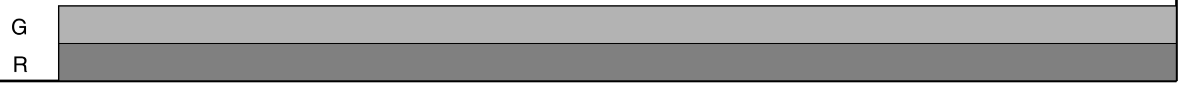

* In this case, the red and green areas on the screen of the panel flash alternately.

■ Defective points assumed from the number of times of LED flashing

No. of times of LED flashing				Category *1	Site detected as defective	Possible defective points (representative examples)	OSD when detected (warning message)
LEDs on the panel		LEDs on the MR					
RED	GRN	RED	GRN				
	Green 1	Red		SD	Panel drive IC	*2	None
	Green 2	Red			Module section IIC	*2	None
	Green 3	Red			Power decrease of DIGITAL-DC-DC	*2	None
	Green 4	Red			Panel having abnormally high temperature	*2	The power is shut down, because the internal temperature has risen. Check the temperature surrounding the PDP. (SD04)
	Green 5	Red			Short-circuiting of the speakers	*2	The power is shut down, because the protection circuit inside the unit is activated. Check if the speaker cables are short-circuited. (SD05)
Red			Green 6		Module microcomputer	Disconnection of the system cable Defective module microcomputer or its peripheral circuits of the panel (Refer to the service manual of the PDP-434PU or PDP-504PU.) Defective main microcomputer (IC7207) Failure in communication (TXD_MD, RXD_MD, REQ_MD) between the panel's module microcomputer and IC7207 (main microcomputer)	None
Red			Green 7		3-wire serial connection of the main section	Defective IC7004 or its peripheral circuits Failure in communication (TXD_IC, XD_IC2, CLK_IC2, IC2_CE, IC2_EMG) between IC7004 and IC7207 (main microcomputer) Defective IC7101 or its peripheral circuits Failure in communication (TXD_IC3, RXD_IC3, CLK_IC3, IC3_CE, IC3_REQ, IC3_BUSY) between IC7101 and IC7207 (main microcomputer)	None
Red			Green 8		IIC of the main section	Defective IC6107 (CD_MAIN) or its peripheral circuits Defective IC6255 (CD_SUB) or its peripheral circuits Defective IC6402 (AD_MAIN) or its peripheral circuits Defective IC6602 (AD_SUB) or its peripheral circuits Defective IC6881 (HDMI_2) or its peripheral circuits Defective IC6951 (BUS_SW) or its peripheral circuits Defective IC7401 (TX) or its peripheral circuits Defective U7501 (TU) or its peripheral circuits Defective IC8002 (AV_SW) or its peripheral circuits Defective IC8005 (RGB_SW) or its peripheral circuits Defective IC7205 (E2P) or its peripheral circuits Failure in communication (SCL_AV, SDA_AV, SCL_MAIN, SDA_MAIN, SCL_HDMI, SDA_HDMI, SCL_EP, SDA_EP) between one of the above devices and IC7207 (main microcomputer)	None
Red			Green 9		Main microcomputer	Defective IC7207 (main microcomputer) Defective flexible cable for communication between the MR MAIN BOARD Assy and the AV BOARD Assy Failure in communication (TXD_IF, RXD_IF, CLK_IF, IF_CE, IF_BUSY) between IC7207 (main microcomputer) and IC8702 (main microcomputer)	None
Red			Green 10		Fan	Failure in the fan motor, or the fan stopped because of dust attached to the fan	None
Red			Green 11		MR or unit having abnormally high temperature	The Media Receiver or the unit being used at high temperature	The power is shut down, because the internal temperature has risen. Check the temperature surrounding the Media Receiver. (SD11)
Red			Green 12		Digital tuner (U.S. model)	Defective digital BS/CS tuner Failure in communication (TXD_DT, RXD_DT) between the digital BS/CS tuner and IC8702 (main microcomputer)	None
Red			Green 13		ASIC power supply (DC-DC)	Defective U8502 (DD_CON) or short-circuiting elsewhere	None
Red		Red 1		PD	MR PWR	Defective Power Supply Assy of the Media Receiver, or power short-circuiting in another Assy	None
Red 2		Red			POWER	*2	None
Red 3		Red			SCAN	*2	None
Red 4		Red			SCN-5V	*2	None
Red 5		Red			Y-DRIVE	*2	None
Red 6		Red			Y-DCDC	*2	None
Red 7		Red			Y-SUS	*2	None
Red 8		Red			ADRS	*2	None
Red 9		Red			X-DRIVE	*2	None
Red 10		Red			X-DCDC	*2	None
Red 11		Red			X-SUS	*2	None
Red 12		Red			D-DCDC	*2	None

*1: Shutdown (SD) is a protective operation controlled by the microcomputer, and you can turn on the unit again using the remote control unit. Power-down (PD) is a protective operation activated by the circuitry and can be reset after AC power is off for about 1 minute.
*2: Refer to the service manual of the PDP-434PU or PDP-504PU.

7.3 PARTS

7.3.1 IC

- The information shown in the list is basic information and may not correspond exactly to that shown in the schematic diagrams.

● List of IC

AD9883AKST-110, SM5301BS, BA7078AF, Sil9993CTG100, HY57V643220CT-7, MBM29PL3200BE70PFV, Sil170BCLG64, CXA2069Q, MSP3417G, MBM29LV160TE-90PFTN, HY57V641620HGT-7, TDA9818TS, TA1287FG, SDA6000, AXF1119, AXY1066, AXY1070

■ AD9883AKST-110 (MR MAIN BOARD ASSY : IC6402)

- 110 MSPS/140 MSPS Analog Interface

● Pin Arrangement (Top view)

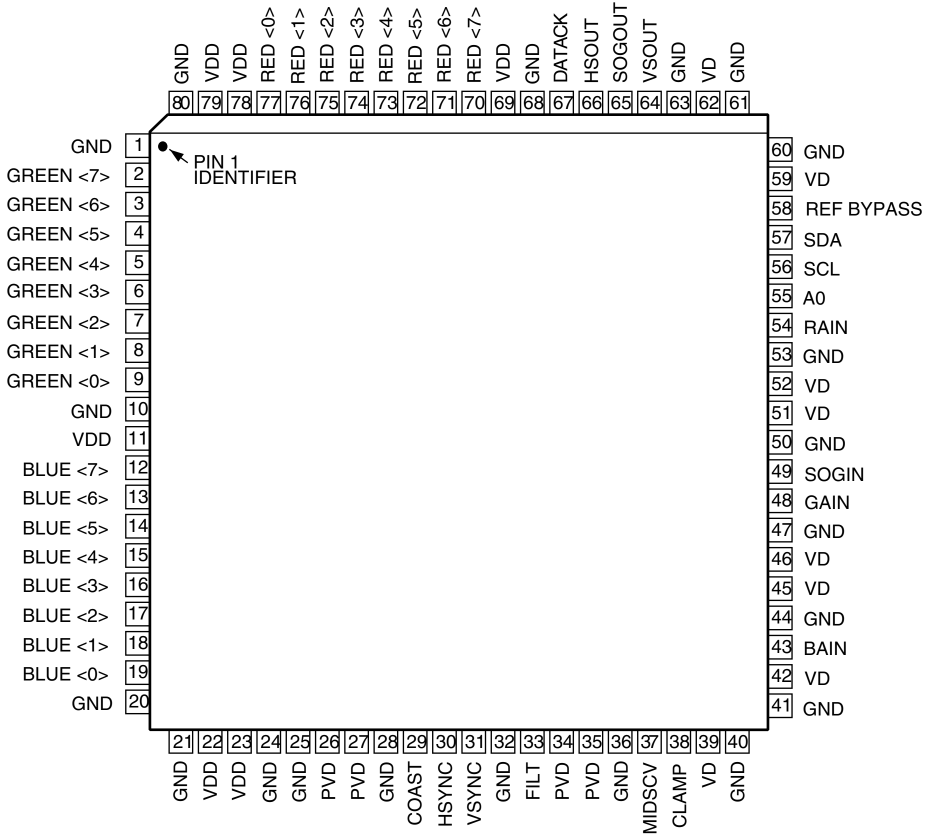

1 GND
2 GREEN <7>
3 GREEN <6>
4 GREEN <5>
5 GREEN <4>
6 GREEN <3>
7 GREEN <2>
8 GREEN <1>
9 GREEN <0>
10 GND
11 VDD
12 BLUE <7>
13 BLUE <6>
14 BLUE <5>
15 BLUE <4>
16 BLUE <3>
17 BLUE <2>
18 BLUE <1>
19 BLUE <0>
20 GND
21 GND
22 VDD
23 VDD
24 GND
25 GND
26 PVD
27 PVD
28 GND
29 COAST
30 HSYNC
31 VSYNC
32 GND
33 FILT
34 PVD
35 PVD
36 GND
37 MIDSCV
38 CLAMP
39 VD
40 GND
41 GND
42 VD
43 BAIN
44 GND
45 VD
46 VD
47 GND
48 GAIN
49 SOGIN
50 GND
51 VD
52 VD
53 GND
54 RAIN
55 A0
56 SCL
57 SDA
58 REF BYPASS
59 VD
60 GND
61 GND
62 VD
63 GND
64 VSOUT
65 SOGOUT
66 HSOUT
67 DATACK
68 GND
69 VDD
70 RED <7>
71 RED <6>
72 RED <5>
73 RED <4>
74 RED <3>
75 RED <2>
76 RED <1>
77 RED <0>
78 VDD
79 VDD
80 GND
PIN 1 IDENTIFIER

● Block Diagram

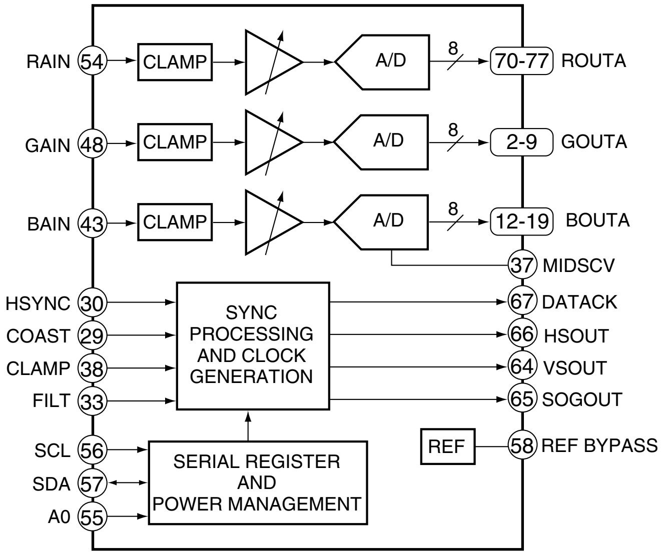

RAIN 54
GAIN 48
BAIN 43
CLAMP
CLAMP
CLAMP
A/D
A/D
A/D
8
8
8
70-77 ROUTA
2-9 GOUTA
12-19 BOUTA
37 MIDSCV
HSYNC 30
COAST 29
CLAMP 38
FILT 33
SYNC PROCESSING AND CLOCK GENERATION
67 DATACK
66 HSOUT
64 VSOUT
65 SOGOUT
REF
58 REF BYPASS
SCL 56
SDA 57
A0 55
SERIAL REGISTER AND POWER MANAGEMENT

● Pin Function

No.	Pin Name	I/O	Pin Function
1	GND	–	Ground
2	GREEN 7	O	Converter Green output (MSB)
3	GREEN 6	O	Converter Green output
4	GREEN 5	O	Converter Green output
5	GREEN 4	O	Converter Green output
6	GREEN 3	O	Converter Green output
7	GREEN 2	O	Converter Green output
8	GREEN 1	O	Converter Green output
9	GREEN 0	O	Converter Green output
10	GND	–	Ground
11	VDD	–	Power supply (3.3V)
12	BLUE 7	O	Converter Blue output (MSB)
13	BLUE 6	O	Converter Blue output
14	BLUE 5	O	Converter Blue output
15	BLUE 4	O	Converter Blue output
16	BLUE 3	O	Converter Blue output
17	BLUE 2	O	Converter Blue output
18	BLUE 1	O	Converter Blue output
19	BLUE 0	O	Converter Blue output
20	GND	–	Ground
21	GND	–	Ground
22	VDD	–	Power supply (3.3V)
23	VDD	–	Power supply (3.3V)
24	GND	–	Ground
25	GND	–	Ground
26	PVD	–	PLL power supply (3.3V)
27	PVD	–	PLL power supply (3.3V)
28	GND	–	Ground
29	COAST	I	PLL COAST signal input
30	HSYNC	I	Horizontal sync. input
31	VSYNC	I	Vertical sync. input
32	GND	–	Ground
33	FILT	–	External filter connection pin for built-in PLL
34	PVD	–	PLL power supply (3.3V)
35	PVD	–	PLL power supply (3.3V)
36	GND	–	Ground
37	MIDSCV	–	Internal middle scale voltage bias
38	CLAMP	I	Clamp input (External clamp signal)
39	VD	–	Analog power supply (3.3V)
40	GND	–	Ground
41	GND	–	Ground
42	VD	–	Analog power supply (3.3V)
43	BAIN	I	Analog input for converter B
44	GND	–	Ground
45	VD	–	Analog power supply (3.3V)

No.	Pin Name	I/O	Pin Function
46	VD	–	Analog power supply (3.3V)
47	GND	–	Ground
48	GAIN	I	Analog input for converter G
49	SOGIN	I	Input for Sync-on Green
50	GND	–	Ground
51	VD	–	Analog power supply (3.3V)
52	VD	–	Analog power supply (3.3V)
53	GND	–	Ground
54	RAIN	I	Analog input for converter R
55	A0	I	Address input 1 of serial port
56	SCL	I	Data clock (max. 100kHz) of serial port
57	SDA	I/O	Data input/output of serial port
58	REF BYPASS	–	Internal reference bypass
59	VD	–	Analog power supply (3.3V)
60	GND	–	Ground
61	GND	–	Ground
62	VD	–	Analog power supply (3.3V)
63	GND	–	Ground
64	VSOUT	O	VSYNC output (phasing with DATACLK)
65	SOGOUT	O	Sync-on-Green slicer output
66	HSOUT	O	HSYNC output (phasing with DATACLK)
67	DATACLK	O	Data input/output clock
68	GND	–	Ground
69	VDD	–	Power supply (3.3V)
70	RED 7	O	Converter Red output (MSB)
71	RED 6	O	Converter Red output
72	RED 5	O	Converter Red output
73	RED 4	O	Converter Red output
74	RED 3	O	Converter Red output
75	RED 2	O	Converter Red output
76	RED 1	O	Converter Red output
77	RED 0	O	Converter Red output
78	VDD	–	Power supply (3.3V)
79	VDD	–	Power supply (3.3V)
80	GND	–	Ground

■ SM5301BS (MR MAIN BOARD ASSY : IC6601)

- Video Filter

● Block Diagram

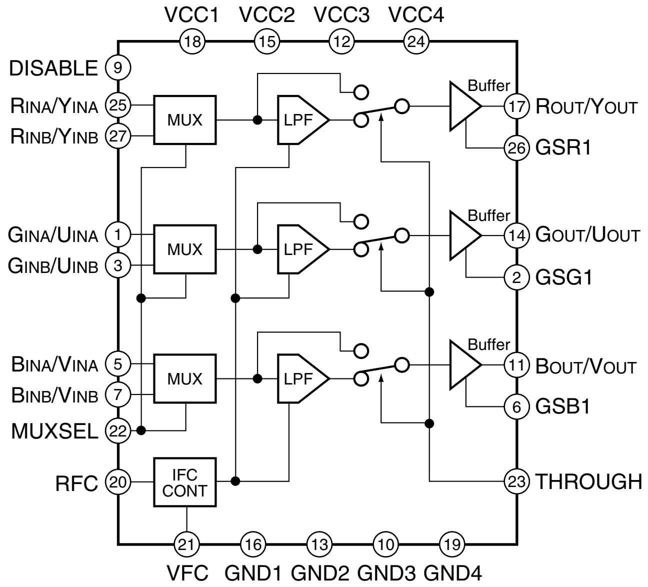
VCC1
VCC2
VCC3
VCC4
18
15
12
24
DISABLE 9
RINA/YINA 25
RINB/YINB 27
GINA/UINA 1
GINB/UINB 3
BINA/VINA 5
BINB/VINB 7
MUXSEL 22
RFC 20
MUX
MUX
MUX
LPF
LPF
LPF
Buffer
Buffer
Buffer
IFC CONT
17 ROUT/YOUT
26 GSR1
14 GOUT/UOUT
2 GSG1
11 BOUT/VOUT
6 GSB1
23 THROUGH
21
16
13
10
19
VFC
GND1
GND2
GND3
GND4

● Pin Arrangement (Top view)

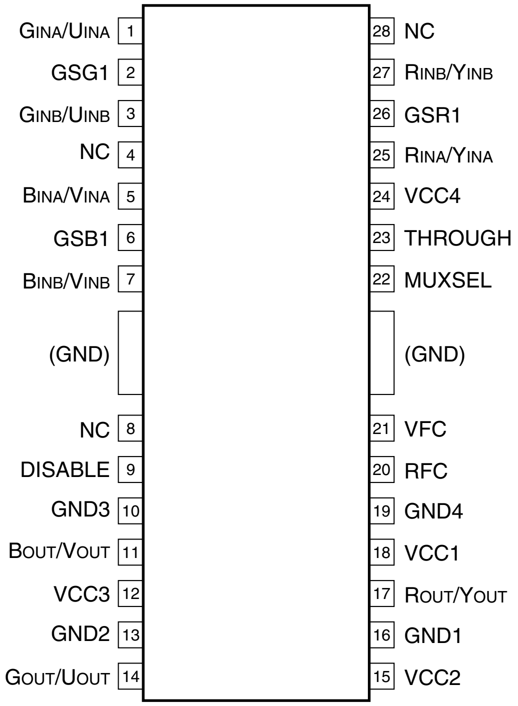
GINA/UINA 1
GSG1 2
GINB/UINB 3
NC 4
BINA/VINA 5
GSB1 6
BINB/VINB 7
(GND)
NC 8
DISABLE 9
GND3 10
BOUT/VOUT 11
VCC3 12
GND2 13
GOUT/UOUT 14
28 NC
27 RINB/YINB
26 GSR1
25 RINA/YINA
24 VCC4
23 THROUGH
22 MUXSEL
(GND)
21 VFC
20 RFC
19 GND4
18 VCC1
17 ROUT/YOUT
16 GND1
15 VCC2

● Pin Function

No.	Pin Name	I/O	Pin Function
1	GINA/UINA	I	Analog GINA or UINA signal input. Sync signal is input on SYNCIN pin.
2	GSG1	I	GOUT/UOUT output buffer gain set input
3	GINB/UINB	I	Analog GINB or UINB signal input. Sync signal is input on SYNCIN pin.
4	(NC)	–	No connection
5	BINA/VINA	I	Analog BINA or VINA signal input. Sync signal is input on SYNCIN pin.
6	GSB1	I	BOUT/VOUT output buffer gain set input
7	BINB/VINB	I	Analog BINB or VINB signal input. Sync signal is input on SYNCIN pin.
8	(NC)	–	No connection
9	DISABLE	I	Power save function. Built-in pull-down resistor. L : Enable H : Disable (Output pins: ROUT/YOUT, GOUT/UOUT, and BOUT/VOUT are high impedance.)
10	GND3	–	Analog ground
11	BOUT/VOUT	O	B/V signal output
12	VCC3	–	Analog 5V supply
13	GND2	–	Analog ground
14	GOUT/UOUT	O	G/U signal output
15	VCC2	–	Analog 5V supply
16	GND1	–	Analog ground
17	ROUT/YOUT	O	R/Y signal output
18	VCC1	–	Analog 5V supply
19	GND4	–	Analog ground
20	RFC	–	LPF (lowpass filter) cutoff frequency setting resistor connection
21	VFC	I	LPF (lowpass filter) cutoff frequency setting voltage input
22	MUXSEL	I	Input select signal. Built-in pull-down resistor. L : XINA pin select H : XINB pin select
23	THROUGH	I	Filter through Built-in pull-down resistor. L : Filter function H : Filter through (buffer only)
24	VCC4	–	Analog 5V supply
25	RINA/YINA	I	Analog RINA or YINA signal input. Sync signal is input on SYNCIN pin.
26	GSR1	I	ROUT/YOUT output buffer gain set input
27	RINB/YINB	I	Analog RINB or YINB signal input. Sync signal is input on SYNCIN pin.
28	(NC)	–	No connection

■ BA7078AF (MR MAIN BOARD ASSY : IC6604)

- Multimedia IC

● Block Diagram

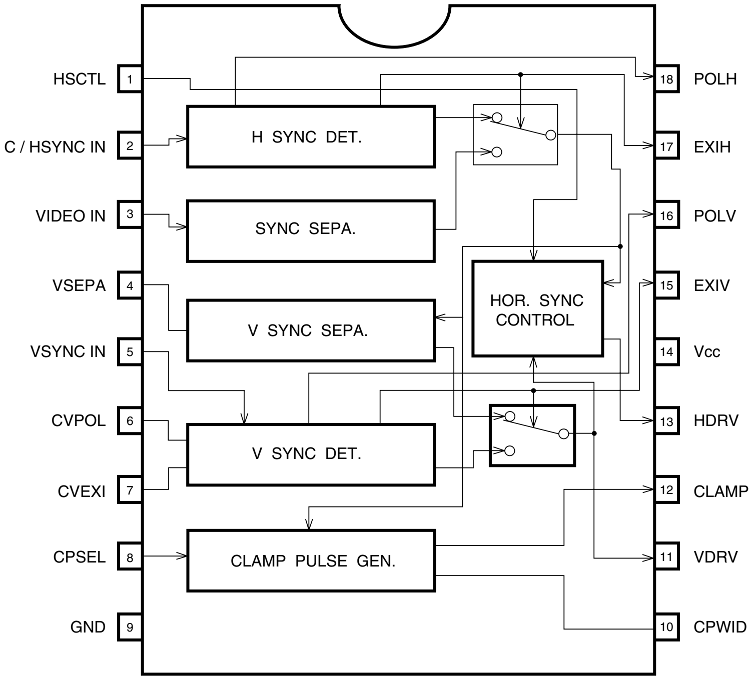
HSCTL
1
C / HSYNC IN
2
VIDEO IN
3
VSEPA
4
VSYNC IN
5
CVPOL
6
CVEXI
7
CPSEL
8
GND
9
18
POLH
17
EXIH
16
POLV
15
EXIV
14
Vcc
13
HDRV
12
CLAMP
11
VDRV
10
CPWID
H SYNC DET.
SYNC SEPA.
V SYNC SEPA.
V SYNC DET.
CLAMP PULSE GEN.
HOR. SYNC CONTROL

● Pin Function

No.	Pin Name	Pin Function
1	HSCTL	HDRV output Used to select whether to output the VDRV section of the HDRV output signal. High : VDRV section of HDRV is output Low : VDRV section of HDRV is not output
2	C/HSYNC IN	Composite sync / H SYNC input Input either the composite synchronization signal or the horizontal synchronization signal. Input is clamped, and is initiated by capacitor coupling.
3	VIDEO IN	SYNC ON VIDEO input Inputs the SYNC ON VIDEO signal(green). Input is sink chip clamped. Input is initiated by capacitor coupling.
4	VSEPA	f-V conversion Converts the horizontal synchronization signal frequency into a voltage. The voltage generated is proportional to the frequency of the horizontal synchronization signal. Attach a 0.56 µF capacitor between the ground pins.
5	VSYNC IN	V SYNC input Inputs the vertical synchronization signal.
6	CVPOL	Vertical polarity integration Integrates the vertical synchronization signal polarity detection circuit. Attach a 1.5 µF capacitor between this pin and the ground.
7	CVEXI	Vertical existence integration Integrates the vertical synchronization signal existence detection circuit. Attach a 1 µF capacitor between this pin and the ground.
8	CPSEL	Setting the clamp position Used to set the clamp pulse generation position to either the front or back edge of HSYNC High : The front edge is the generation position Open : Composite / H SYNC IN : The front edge is the generation position VIDEO IN : The back edge is the generation position Low : The back edge is the generation position
9	GND	Ground
10	CPWID	Setting the clamp pulse width Sets the clamp pulse width according to the attached time constant. Attach a resistor between this pin and VCC and, a capacitor between this pin and GND. When R = 3.9kΩ and C = 100pF, pulse width is approximately 400 ns. Set the resistor to register an abnormality at 1kΩ.
11	VDRV	VDRV output Outputs the vertical synchronization signal. The output signal has positive polarity.
12	CLAMP	Clamp output Outputs the clamp pulse generated from the vertical synchronization signal. The output signal has a positive polarity.
13	HDRV	HDRV output Outputs the clamp pulse generated from the horizontal synchronization signal. The output signal has positive polarity.
14	Vcc	Power supply
15	EXIV	Vertical existence output Indecates whether the vertical synchronization signal exists.
16	POLV	Vertical polarity output Indicates the polarity of the vertical synchronization signal.
17	EXIH	Horizontal existence output Indicates whether the horizontal synchronization signal exists.
18	POLH	Horizontal polarity output Indicates the polarity of the horizontal synchronization signal.

■ SiI9993CTG100 (MR MAIN BOARD ASSY : IC6881)

- HDCP Panel Link Receiver

● Pin Arrangement (Top view)

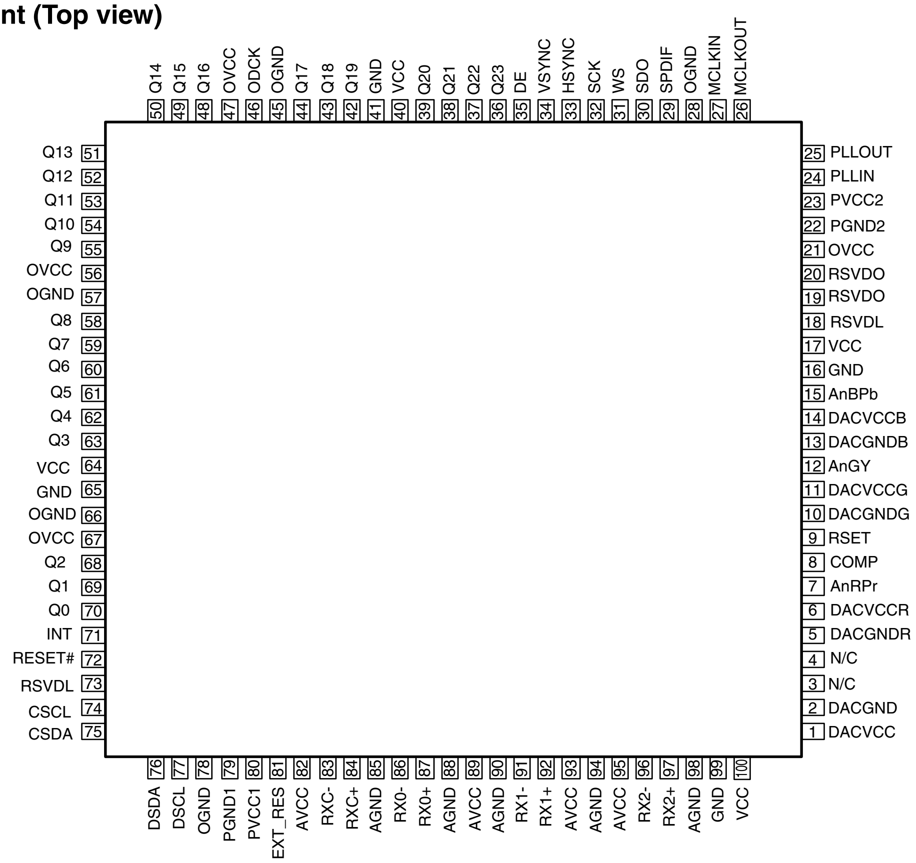
50 Q14
49 Q15
48 Q16
47 OVCC
46 ODCK
45 OGND
44 Q17
43 Q18
42 Q19
41 GND
40 VCC
39 Q20
38 Q21
37 Q22
36 Q23
35 DE
34 VSYNC
33 HSYNC
32 SCK
31 WS
30 SDO
29 SPDIF
28 OGND
27 MCLKIN
26 MCLKOUT
Q13 51
Q12 52
Q11 53
Q10 54
Q9 55
OVCC 56
OGND 57
Q8 58
Q7 59
Q6 60
Q5 61
Q4 62
Q3 63
VCC 64
GND 65
OGND 66
OVCC 67
Q2 68
Q1 69
Q0 70
INT 71
RESET# 72
RSVDL 73
CSCL 74
CSDA 75
25 PLLOUT
24 PLLIN
23 PVCC2
22 PGND2
21 OVCC
20 RSVDO
19 RSVDO
18 RSVDL
17 VCC
16 GND
15 AnBPb
14 DACVCCB
13 DACGNDB
12 AnGY
11 DACVCCG
10 DACGNDG
9 RSET
8 COMP
7 AnRPr
6 DACVCCR
5 DACGNDR
4 N/C
3 N/C
2 DACGND
1 DACVCC
76 DSDA
77 DSCL
78 OGND
79 PGND1
80 PVCC1
81 EXT_RES
82 AVCC
83 RXC-
84 RXC+
85 AGND
86 RX0-
87 RX0+
88 AGND
89 AVCC
90 AGND
91 RX1-
92 RX1+
93 AVCC
94 AGND
95 AVCC
96 RX2-
97 RX2+
98 AGND
99 GND
100 VCC

● Block Diagram

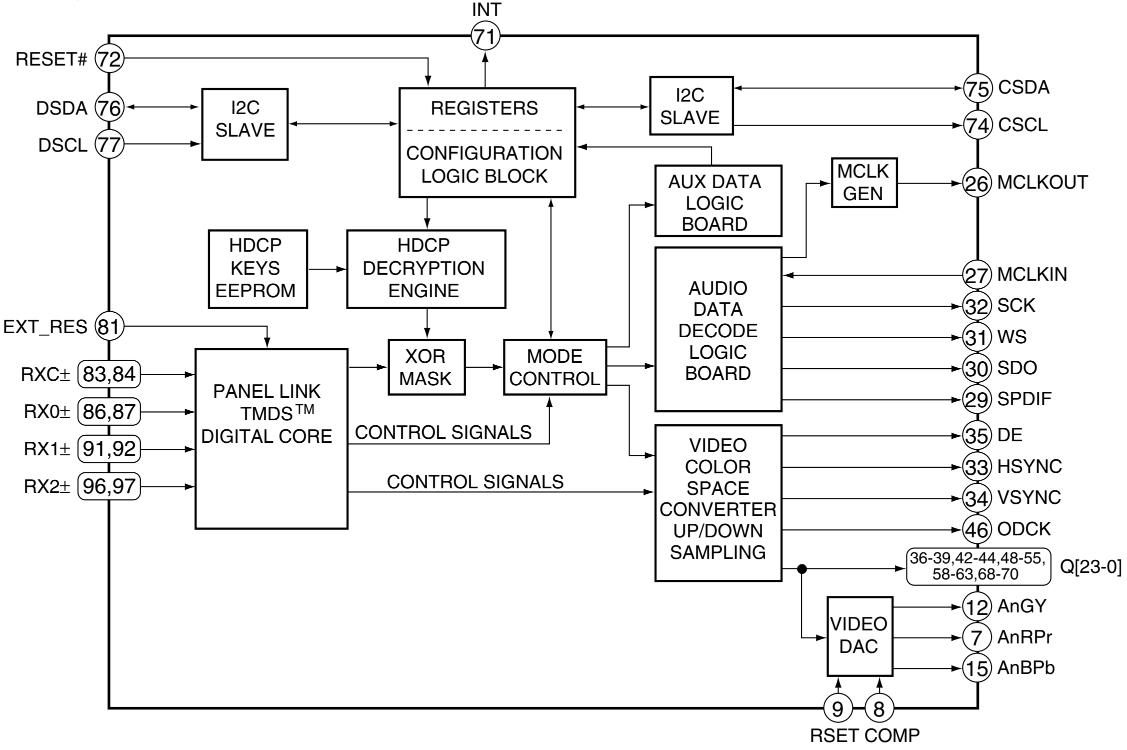
INT
71
RESET# 72
DSDA 76
DSCL 77
I2C SLAVE
REGISTERS
CONFIGURATION LOGIC BLOCK
I2C SLAVE
75 CSDA
74 CSCL
AUX DATA LOGIC BOARD
MCLK GEN
26 MCLKOUT
HDCP KEYS EEPROM
HDCP DECRYPTION ENGINE
27 MCLKIN
AUDIO DATA DECODE LOGIC BOARD
32 SCK
31 WS
30 SDO
29 SPDIF
EXT_RES 81
XOR MASK
MODE CONTROL
RXC± 83,84
RX0± 86,87
RX1± 91,92
RX2± 96,97
PANEL LINK TMDS™ DIGITAL CORE
CONTROL SIGNALS
CONTROL SIGNALS
VIDEO COLOR SPACE CONVERTER UP/DOWN SAMPLING
35 DE
33 HSYNC
34 VSYNC
46 ODCK
36-39,42-44,48-55, 58-63,68-70 Q[23-0]
VIDEO DAC
12 AnGY
7 AnRPr
15 AnBPb
9 8
RSET COMP

- **Pin Function**

No.	Pin Name	I/O	Pin Function	No.	Pin Name	I/O	Pin Function
1	DACVCC	–	DAC power supply (3.3V)	51	Q13	O	24-bit output pixel data bus
2	DACGND	–	DAC ground	52	Q12	O	24-bit output pixel data bus
3	N/C	–	No connection	53	Q11	O	24-bit output pixel data bus
4	N/C	–	No connection	54	Q10	O	24-bit output pixel data bus
5	DACGNDR	–	DAC Red ground	55	Q9	O	24-bit output pixel data bus
6	DACVCCR	–	DAC Red power supply (3.3V)	56	OVCC	–	Output bus power supply (3.3V)
7	AnRPr	O	Red, Pr output of analog video	57	OGND	–	Output bus ground
8	COMP	I	For reference amp. correction of DAC inside	58	Q8	O	24-bit output pixel data bus
9	RSET	I	Full scale adjustment resistor input	59	Q7	O	24-bit output pixel data bus
10	DACGNDG	–	DAC Green ground	60	Q6	O	24-bit output pixel data bus
11	DACVCCG	–	DAC Green power supply (3.3V)	61	Q5	O	24-bit output pixel data bus
12	AnGY	O	Green, Y output of analog video	62	Q4	O	24-bit output pixel data bus
13	DACGNDB	–	DAC Blue ground	63	Q3	O	24-bit output pixel data bus
14	DACVCCB	–	DAC Blue power supply (3.3V)	64	VCC	–	Digital power supply (3.3V)
15	AnBPb	O	Blue, Pb output of analog video	65	GND	–	Digital ground
16	GND	–	Digital ground	66	OGND	–	Output bus ground
17	VCC	–	Digital power supply (3.3V)	67	OVCC	–	Output bus power supply (3.3V)
18	RSVDL	I	Reserved Fixed to low.	68	Q2	O	24-bit output pixel data bus
19	RSVDD	O	Reserved No connection	69	Q1	O	24-bit output pixel data bus
20	RSVDD	O	Reserved No connection	70	Q0	O	24-bit output pixel data bus
21	OVCC	–	Output bus power supply (3.3V)	71	INT	O	Interruption output
22	PGND2	–	Audio PLL ground	72	RESET#	I	Reset Activ low.
23	PVCC2	–	Audio PLL power supply (3.3V)	73	RSVDL	I	Reserved Fixed to low.
24	PLLIN	I/O	PLL filter input	74	CSCL	I	Configuration I2C clock
25	PLLOUT	I/O	PLL filter output	75	CSDA	I/O	Configuration I2C data
26	MCCLKOUT	O	Audio master clock output	76	DSDA	I/O	DDC I2C data
27	MCCLKIN	I	Reference audio master clock input	77	DSCL	I	DDC I2C clock
28	OGND	–	Output bus ground	78	OGND	–	Output bus ground
29	SPDIF	O	SPDIF audio output	79	PGND1	–	PLL ground
30	SDO	O	I2S serial data output	80	PVCC1	–	PLL power supply (3.3V)
31	WS	O	I2S word selecting output	81	EXT_RES	I	Input impedance adjustment
32	SCK	O	I2S serial clock output	82	AVCC	–	Analog power supply (3.3V)
33	HSYNC	O	Horizontal sync. control signal output	83	RXC-	I	TMDS data input
34	VSYNC	O	Vertical sync. control signal output	84	RXC+	I	TMDS data input
35	DE	O	Data enable	85	AGND	–	Analog ground
36	Q23	O	24-bit output pixel data bus	86	RX0-	I	TMDS data input
37	Q22	O	24-bit output pixel data bus	87	RX0+	I	TMDS data input
38	Q21	O	24-bit output pixel data bus	88	AGND	–	Analog ground
39	Q20	O	24-bit output pixel data bus	89	AVCC	–	Analog power supply (3.3V)
40	VCC	–	Digital power supply (3.3V)	90	AGND	–	Analog ground
41	GND	–	Digital ground	91	RX1-	I	TMDS data input
42	Q19	O	24-bit output pixel data bus	92	RX1+	I	TMDS data input
43	Q18	O	24-bit output pixel data bus	93	AVCC	–	Analog power supply (3.3V)
44	Q17	O	24-bit output pixel data bus	94	AGND	–	Analog ground
45	OGND	–	Output bus ground	95	AVCC	–	Analog power supply (3.3V)
46	ODCK	O	Data clock output	96	RX2-	I	TMDS data input
47	OVCC	–	Output bus power supply (3.3V)	97	RX2+	I	TMDS data input
48	Q16	O	24-bit output pixel data bus	98	AGND	–	Analog ground
49	Q15	O	24-bit output pixel data bus	99	GND	–	Digital ground
50	Q14	O	24-bit output pixel data bus	100	VCC	–	Digital power supply (3.3V)

■ HY57V643220CT-7 (MR MAIN BOARD ASSY : IC7001, IC7002)

- Synchronous DRAM

● Block Diagram

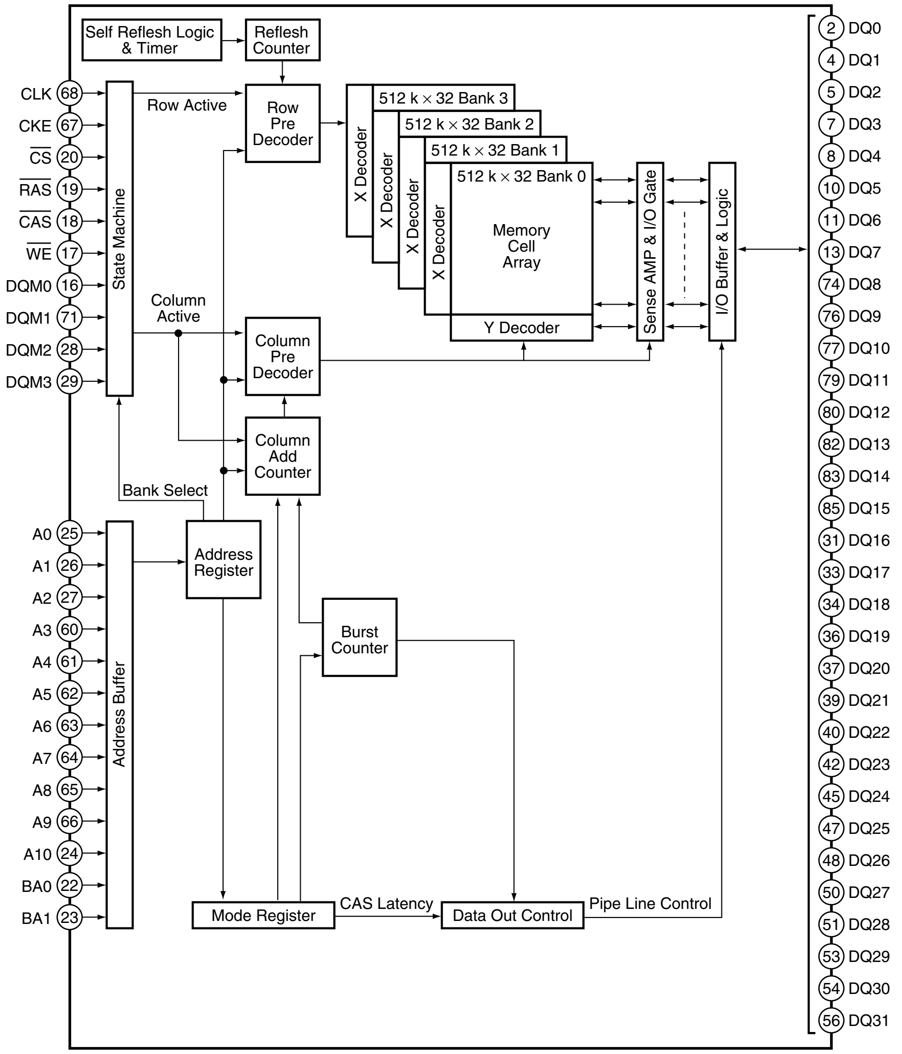
Self Reflesh Logic & Timer
Reflesh Counter
CLK 68
CKE 67
CS 20
RAS 19
CAS 18
WE 17
DQM0 16
DQM1 71
DQM2 28
DQM3 29
State Machine
Row Active
Row Pre Decoder
X Decoder
512 k × 32 Bank 3
512 k × 32 Bank 2
512 k × 32 Bank 1
512 k × 32 Bank 0
Memory Cell Array
Y Decoder
Sense AMP & I/O Gate
I/O Buffer & Logic
Column Active
Column Pre Decoder
Column Add Counter
Bank Select
Address Register
Burst Counter
A0 25
A1 26
A2 27
A3 60
A4 61
A5 62
A6 63
A7 64
A8 65
A9 66
A10 24
BA0 22
BA1 23
Address Buffer
Mode Register
CAS Latency
Data Out Control
Pipe Line Control
2 DQ0
4 DQ1
5 DQ2
7 DQ3
8 DQ4
10 DQ5
11 DQ6
13 DQ7
74 DQ8
76 DQ9
77 DQ10
79 DQ11
80 DQ12
82 DQ13
83 DQ14
85 DQ15
31 DQ16
33 DQ17
34 DQ18
36 DQ19
37 DQ20
39 DQ21
40 DQ22
42 DQ23
45 DQ24
47 DQ25
48 DQ26
50 DQ27
51 DQ28
53 DQ29
54 DQ30
56 DQ31

● Pin Function

No.	Pin Name	I/O	Pin Function	No.	Pin Name	I/O	Pin Function
1	VDD	–	Power supply	44	VSS	–	Ground
2	DQ0	I/O	Data input/output	45	DQ24	I/O	Data input/output
3	VDDQ	–	Power supply for output buffer	46	VSSQ	–	Ground for output buffer
4	DQ1	I/O	Data input/output	47	DQ25	I/O	Data input/output
5	DQ2	I/O	Data input/output	48	DQ26	I/O	Data input/output
6	VSSQ	–	Ground for output buffer	49	VDDQ	–	Power supply for output buffer
7	DQ3	I/O	Data input/output	50	DQ27	I/O	Data input/output
8	DQ4	I/O	Data input/output	51	DQ28	I/O	Data input/output
9	VDDQ	–	Power supply for output buffer	52	VSSQ	–	Ground for output buffer
10	DQ5	I/O	Data input/output	53	DQ29	I/O	Data input/output
11	DQ6	I/O	Data input/output	54	DQ30	I/O	Data input/output
12	VSSQ	–	Ground for output buffer	55	VDDQ	–	Power supply for output buffer
13	DQ7	I/O	Data input/output	56	DQ31	I/O	Data input/output
14	NC	–	No connection	57	NC	–	No connection
15	VDD	–	Power supply	58	VSS	–	Ground
16	DQM0	I	Data input/output mask	59	DQM3	I	Data input/output mask
17	/WE	I	Write enable	60	A3	I	Address input
18	/CAS	I	Column address strobe	61	A4	I	Address input
19	/RAS	I	Row address strobe	62	A5	I	Address input
20	/CS	I	Chip select input	63	A6	I	Address input
21	NC	–	No connection	64	A7	I	Address input
22	BA0	I	Bank address input	65	A8	I	Address input
23	BA1	I	Bank address input	66	A9	I	Address input
24	A10/AP	I	Address input	67	CKE	I	Clock enable
25	A0	I	Address input	68	CLK	I	System clock input
26	A1	I	Address input	69	NC	–	No connection
27	A2	I	Address input	70	NC	–	No connection
28	DQM2	I	Data input/output mask	71	DQM1	I	Data input/output mask
29	VDD	–	Power supply	72	VSS	–	Ground
30	NC	–	No connection	73	NC	–	No connection
31	DQ16	I/O	Data input/output	74	DQ8	I/O	Data input/output
32	VSSQ	–	Ground for output buffer	75	VDDQ	–	Power supply for output buffer
33	DQ17	I/O	Data input/output	76	DQ9	I/O	Data input/output
34	DQ18	I/O	Data input/output	77	DQ10	I/O	Data input/output
35	VDDQ	–	Power supply for output buffer	78	VSSQ	–	Ground for output buffer
36	DQ19	I/O	Data input/output	79	DQ11	I/O	Data input/output
37	DQ20	I/O	Data input/output	80	DQ12	I/O	Data input/output
38	VSSQ	–	Ground for output buffer	81	VDDQ	–	Power supply for output buffer
39	DQ21	I/O	Data input/output	82	DQ13	I/O	Data input/output
40	DQ22	I/O	Data input/output	83	DQ14	I/O	Data input/output
41	VDDQ	–	Power supply for output buffer	84	VSSQ	–	Ground for output buffer
42	DQ23	I/O	Data input/output	85	DQ15	I/O	Data input/output
43	VDD	–	Power supply	86	VSS	–	Ground

■ MBM29PL3200BE70PFV (MR MAIN BOARD ASSY : IC7152)

- Page Mode Flash Memory

● Block Diagram

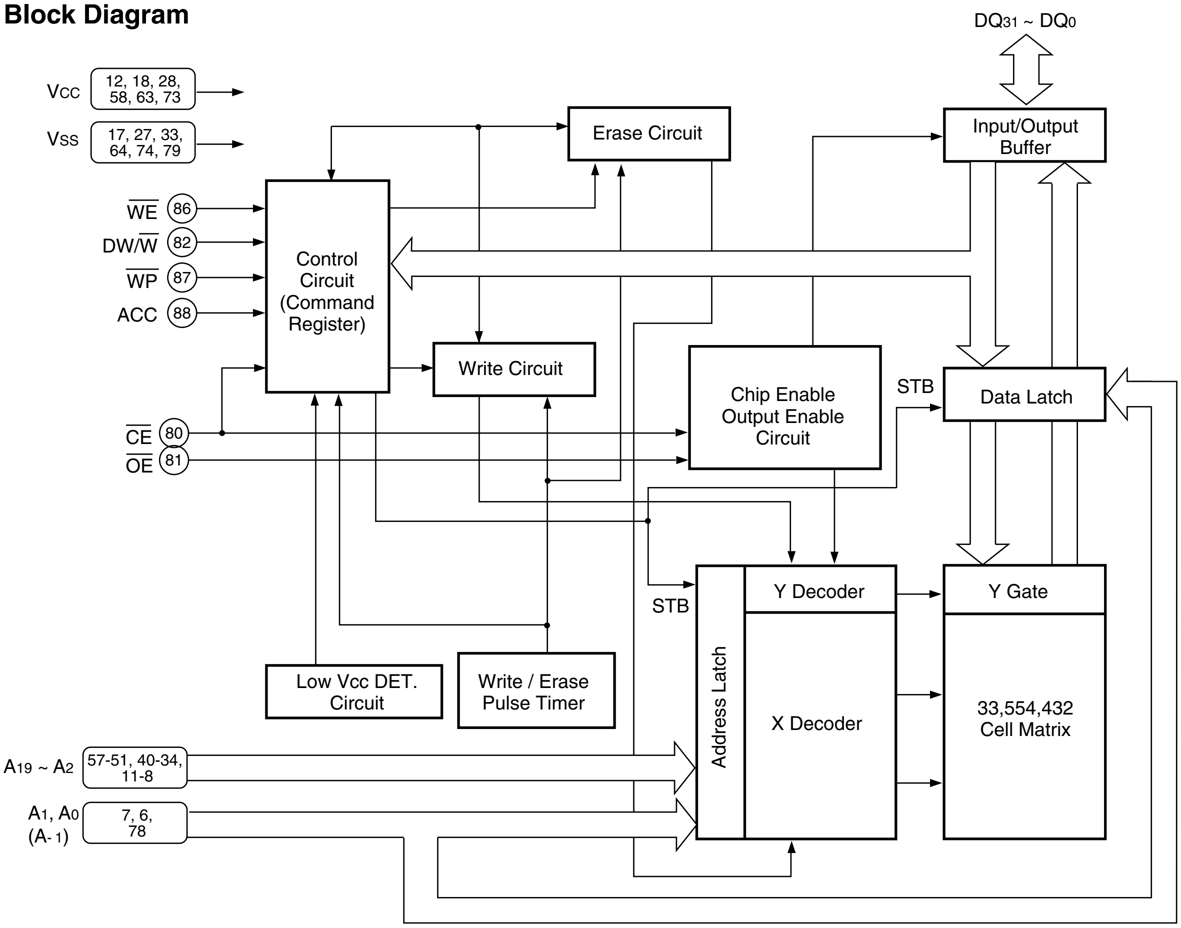
DQ31 ~ DQ0
Vcc
12, 18, 28, 58, 63, 73
Vss
17, 27, 33, 64, 74, 79
WE 86
DW/W 82
WP 87
ACC 88
Control Circuit (Command Register)
Erase Circuit
Input/Output Buffer
Write Circuit
Chip Enable Output Enable Circuit
STB
Data Latch
CE 80
OE 81
Y Decoder
Y Gate
STB
Address Latch
X Decoder
33,554,432 Cell Matrix
Low Vcc DET. Circuit
Write / Erase Pulse Timer
A19 ~ A2
57-51, 40-34, 11-8
A1, A0 (A-1)
7, 6, 78

● Pin Function

No.	Pin Name	I/O	Pin Function
57-51, 40-34, 11-6, 78	A_{19} - A_0, A_{-1}	I	Address input
78-75, 72-65, 62-59, 32-19, 26-19, 16-13	DQ_{31} - DQ_0	I/O	Data input/output
80	CE	I	Chip enable
81	OE	I	Output enable
86	WE	I	Write enable
82	DW/W	I	16 bit, 32 bit mode switch
87	WP	I	Write protect
88	ACC	I	Acceleration
17, 27, 33, 64, 74, 79	Vss	–	Ground
12, 18, 28, 58, 63, 73	Vcc	–	Power supply
1-5, 41-50, 83-85, 89, 90	N.C.	–	No connection

■ SiI170BCLG64 (MR MAIN BOARD ASSY : IC7401)

- HDCP Panel Link Transmitter

● Pin Arrangement (Top view)

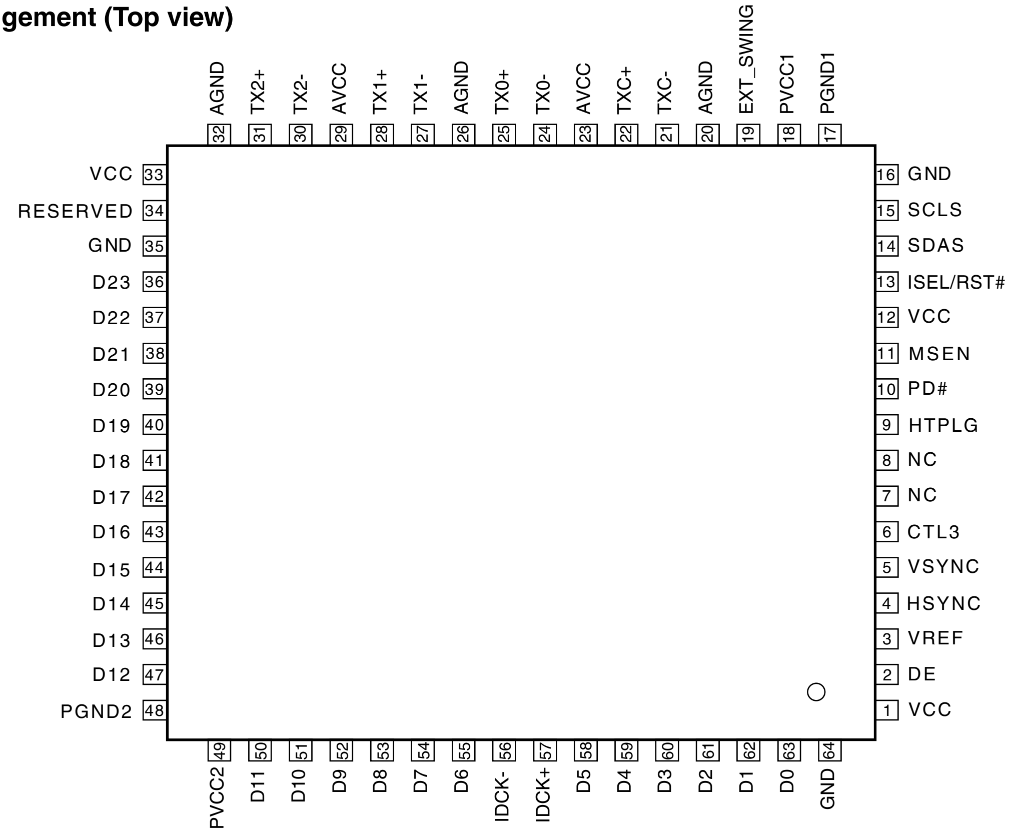

32 AGND
31 TX2+
30 TX2-
29 AVCC
28 TX1+
27 TX1-
26 AGND
25 TX0+
24 TX0-
23 AVCC
22 TXC+
21 TXC-
20 AGND
19 EXT_SWING
18 PVCC1
17 PGND1
VCC 33
RESERVED 34
GND 35
D23 36
D22 37
D21 38
D20 39
D19 40
D18 41
D17 42
D16 43
D15 44
D14 45
D13 46
D12 47
PGND2 48
16 GND
15 SCLS
14 SDAS
13 ISEL/RST#
12 VCC
11 MSEN
10 PD#
9 HTPLG
8 NC
7 NC
6 CTL3
5 VSYNC
4 HSYNC
3 VREF
2 DE
1 VCC
49 PVCC2
50 D11
51 D10
52 D9
53 D8
54 D7
55 D6
56 IDCK-
57 IDCK+
58 D5
59 D4
60 D3
61 D2
62 D1
63 D0
64 GND

● Block Diagram

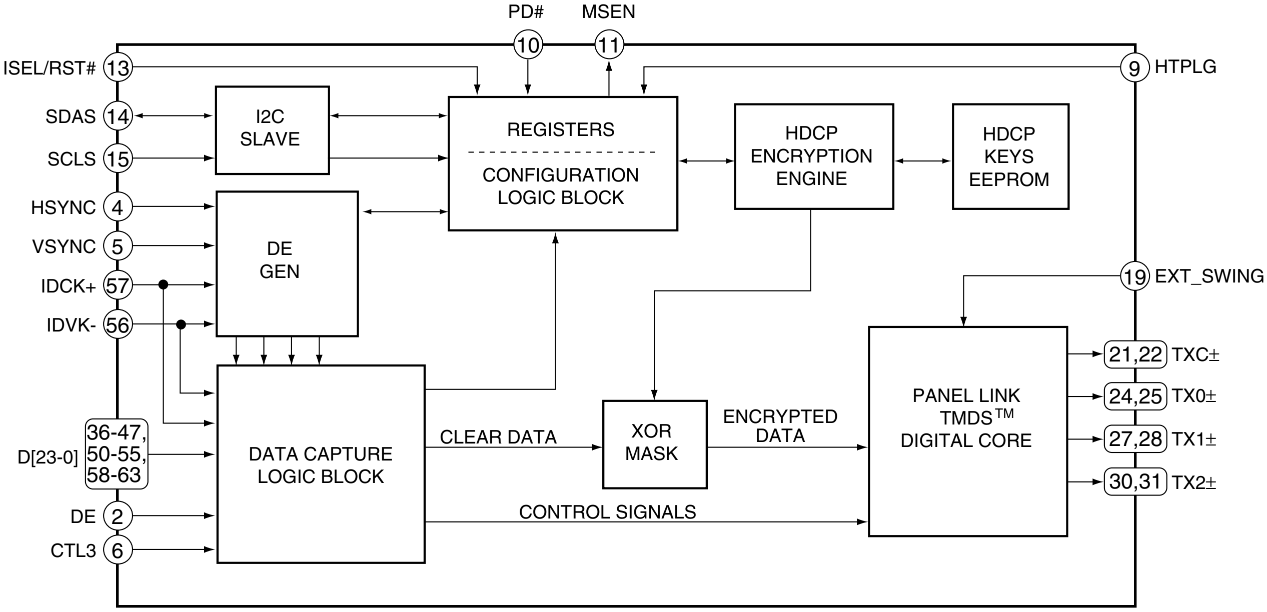

PD#
10
MSEN
11
ISEL/RST# 13
9 HTPLG
SDAS 14
SCLS 15
I2C SLAVE
REGISTERS
CONFIGURATION LOGIC BLOCK
HDCP ENCRYPTION ENGINE
HDCP KEYS EEPROM
HSYNC 4
VSYNC 5
IDCK+ 57
IDVK- 56
DE GEN
19 EXT_SWING
D[23-0]
36-47, 50-55, 58-63
DE 2
CTL3 6
DATA CAPTURE LOGIC BLOCK
CLEAR DATA
XOR MASK
ENCRYPTED DATA
PANEL LINK TMDS™ DIGITAL CORE
CONTROL SIGNALS
21,22 TXC±
24,25 TX0±
27,28 TX1±
30,31 TX2±

● Pin Function

No.	Pin Name	I/O	Pin Function
1	VCC	–	Digital power supply (3.3V)
2	DE	I	Data enable
3	VREF	I	3.3V fixed
4	HSYNC	I	Horizontal sync. control signal input
5	VSYNC	I	Vertical sync. control signal input
6	CTL3	I	External CTL3 input
7	NC	–	No connection
8	NC	–	No connection
9	HTPLG	I	Monitor chrage input
10	PD#	I	Power down input (Active low)
11	MSEN	O	Monitor sense output (open-collector output)
12	VCC	–	Digital power supply (3.3V)
13	ISEL/RST#	I	I2C interface selecting input High: I2C interface is active
14	SDAS	I/O	DDC I2C data input/output
15	SCLS	I	DDC I2C clock input
16	GND	–	Digital ground
17	PGND1	–	PLL analog ground
18	PVCC1	–	Analog power supply for PLL of primary side (3.3V)
19	EXT_SWING	I	Voltage regulation adjustment
20	AGND	–	Analog ground
21	TXC-	O	Differential signal clock output of TMDS Low voltage
22	TXC+	O	Differential signal clock output of TMDS Low voltage
23	AVCC	–	Analog power supply (3.3V)
24	TX0-	O	Differential signal clock output of TMDS Low voltage
25	TX0+	O	Differential signal clock output of TMDS Low voltage
26	AGND	–	Analog ground
27	TX1-	O	Differential signal clock output of TMDS Low voltage
28	TX1+	O	Differential signal clock output of TMDS Low voltage
29	AVCC	–	Analog power supply (3.3V)
30	TX2-	O	Differential signal clock output of TMDS Low voltage
31	TX2+	O	Differential signal clock output of TMDS Low voltage
32	AGND	–	Analog ground
33	VCC	–	Digital power supply (3.3V)
34	RESERVED	I	Reserved pin for Silicon Image Normally, fixed to low.
35	GND	–	Digital ground
36	D23	I	24-bit pixel bus input
37	D22	I	24-bit pixel bus input
38	D21	I	24-bit pixel bus input
39	D20	I	24-bit pixel bus input
40	D19	I	24-bit pixel bus input
41	D18	I	24-bit pixel bus input
42	D17	I	24-bit pixel bus input
43	D16	I	24-bit pixel bus input
44	D15	I	24-bit pixel bus input
45	D14	I	24-bit pixel bus input

No.	Pin Name	I/O	Pin Function
46	D13	I	24-bit pixel bus input
47	D12	I	24-bit pixel bus input
48	PGND2	–	PLL analog ground
49	PVCC2	–	Analog power supply for filter PLL (3.3V)
50	D11	I	24-bit / 12-bit pixel bus input
51	D10	I	24-bit / 12-bit pixel bus input
52	D9	I	24-bit / 12-bit pixel bus input
53	D8	I	24-bit / 12-bit pixel bus input
54	D7	I	24-bit / 12-bit pixel bus input
55	D6	I	24-bit / 12-bit pixel bus input
56	IDCK-	I	Data clock - input
57	IDCK+	I	Data clock + input
58	D5	I	24-bit / 12-bit pixel bus input
59	D4	I	24-bit / 12-bit pixel bus input
60	D3	I	24-bit / 12-bit pixel bus input
61	D2	I	24-bit / 12-bit pixel bus input
62	D1	I	24-bit / 12-bit pixel bus input
63	D0	I	24-bit / 12-bit pixel bus input
64	GND	–	Digital ground

■ CXA2069Q (AV BOARD ASSY : IC8002)

- 7-Input 3-Output Audio/Video Switch

● Block Diagram

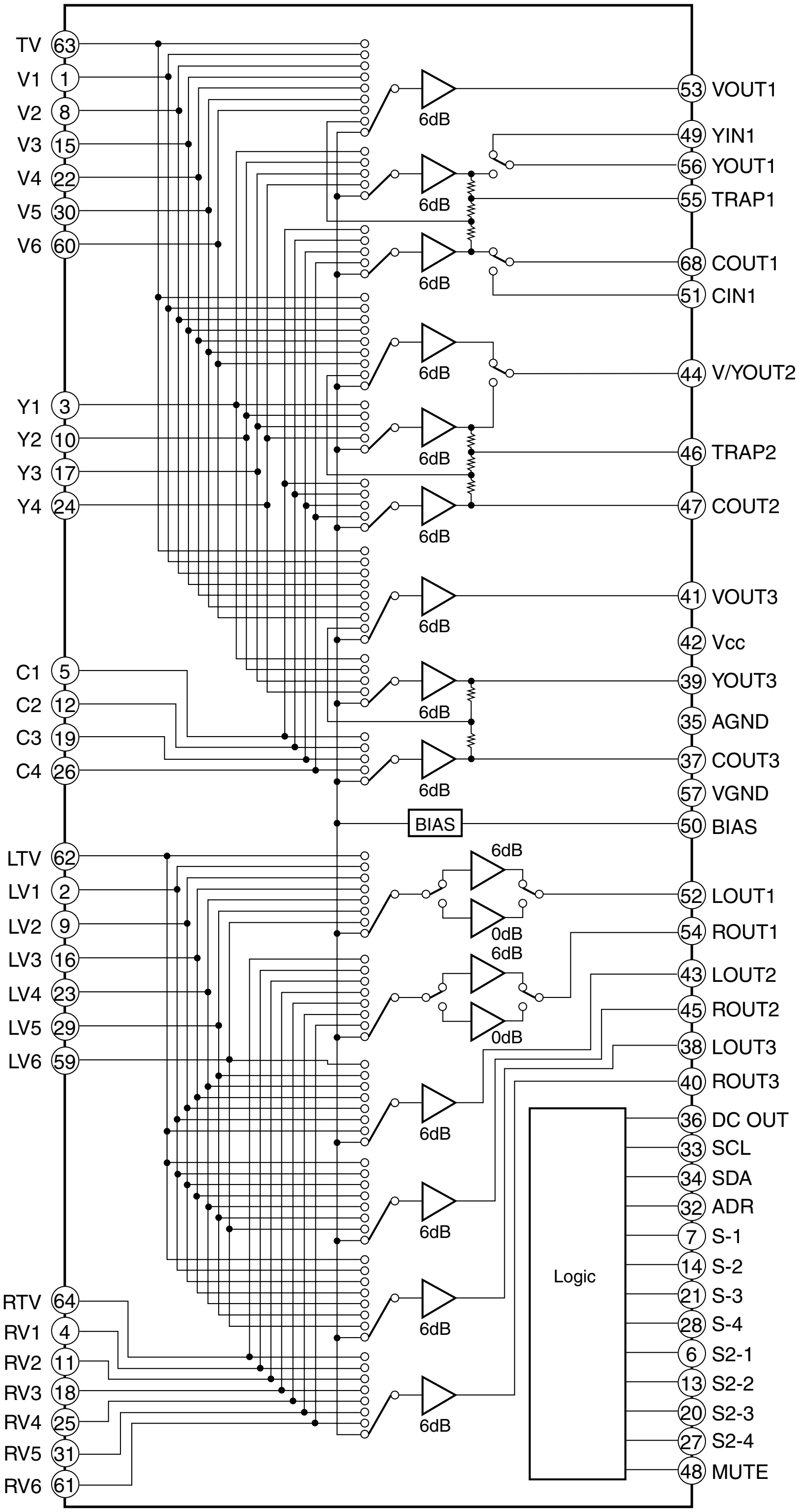
TV 63
V1 1
V2 8
V3 15
V4 22
V5 30
V6 60
Y1 3
Y2 10
Y3 17
Y4 24
C1 5
C2 12
C3 19
C4 26
LTV 62
LV1 2
LV2 9
LV3 16
LV4 23
LV5 29
LV6 59
RTV 64
RV1 4
RV2 11
RV3 18
RV4 25
RV5 31
RV6 61
6dB
0dB
BIAS
Logic
53 VOUT1
49 YIN1
56 YOUT1
55 TRAP1
68 COUT1
51 CIN1
44 V/YOUT2
46 TRAP2
47 COUT2
41 VOUT3
42 Vcc
39 YOUT3
35 AGND
37 COUT3
57 VGND
50 BIAS
52 LOUT1
54 ROUT1
43 LOUT2
45 ROUT2
38 LOUT3
40 ROUT3
36 DC OUT
33 SCL
34 SDA
32 ADR
7 S-1
14 S-2
21 S-3
28 S-4
6 S2-1
13 S2-2
20 S2-3
27 S2-4
48 MUTE

● Pin Function

No.	Pin Name	I/O	Pin Function
63 1 8 15 22 30 60	TV V1 V2 V3 V4 V5 V6	I	Video signal inputs. Input composite video signals.
3 10 17 24 49	Y1 Y2 Y3 Y4 YIN1	I	Y/C separation signal inputs. Input luminance signals. The YIN1 pin inputs the signal obtained by Y/C separating the VOUT1 pin output.
5 12 19 26 51	C1 C2 C3 C4 CIN1	I	Y/C separation signal inputs. Input chrominance signals. The CIN1 pin inputs the signal obtained by Y/C separating the VOUT1 pin output.
62, 2 9, 16 23, 29 59, 64 4, 11 18, 25 31, 61	LTV, LV1 LV2, LV3 LV4, LV5 LV6, RTV RV1, RV2 RV3, RV4 RV5, RV6	I	Audio signal inputs.
53 41	VOUT1 VOUT3	O	Video signal outputs. Output composite video signals.
44	V/YOUT2	O	Video signal output. Either composite video signal output or luminance signal output can be selected by I2C bus control.
56	YOUT1	O	Video signal outputs. Output luminance signals.
39	YOUT3		
58 47 37	COUT1 COUT2 COUT3	O	Video signal outputs. Output chrominance signals.
52 43 38 54 45 40	LOUT1 LOUT2 LOUT3 ROUT1 ROUT2 ROUT3	O	Audio signal outputs. Zo=50 ohm (within DC ± 2mA)
6 13 20 27	S2-1 S2-2 S2-3 S2-4	–	Detects the S2-compatible DC superimposed onto the C signal. 4 : 3 video signal at 1.3 V or less 4 : 3 letter-box signal at 1.3 V or more to 2.5 V or less 16 : 9 picture squeezed signal at 2.5 V or more This pin is pulled down to GND by a 100 k ohm resistor, so the 4 : 3 video signal is selected when open.

No.	Pin Name	I/O	Pin Function
7 14 21 28	S-1 S-2 S-3 S-4	–	Composite video/S selector. The detection results are written to the status register. S signal at 3.5 V or less. Composite video signal at 3.5 V or more. This pin is pulled up to 5 V by a 100 k ohm resistor, so the composite video signal is selected when open.
32	ADR	–	Selects the slave address for the I2C bus. 90H at 1.5 V or less 92H at 2.5 V or more 90H when open.
33	SCL	I	I2C bus signal input VILmax=1.5 V VIHmin=3.0 V
34	SDA	I	I2C bus signal input VILmax=1.5 V VIHmin=3.0 V VOLmax=0.4 V
36	DC_OUT	O	Outputs the S2-compatible DC superimposed onto the COUT3 output. The DC is superimposed by connecting this pin to the COUT3 output via a capacitor. Control is performed by the I2C bus. When 0 V is output, Q1 is ON and the impedance is 5 k ohm. S2 protocol output impedance of 10 ± 3 k ohm is realized by attaching external resistance of 4.7 k ohm. DC_OUT (bus) Output DC 0 4.5 V 1 0 V 2 1.9 V 3 4.5 V
55 46	TRAP1 TRAP2	–	Connects trap circuit for subcarrier.
48	MUTE	–	Audio signal output mute. Mute OFF at 1.5 V or less Mute ON at 2.5 V or more Mute OFF when open.
50	BIAS	–	Internal reference bias (VCC/2). Connect to GND via a capacitor.

■ MSP3417G (AV BOARD ASSY : IC7502)

- Multisound Processor

● Block Diagram

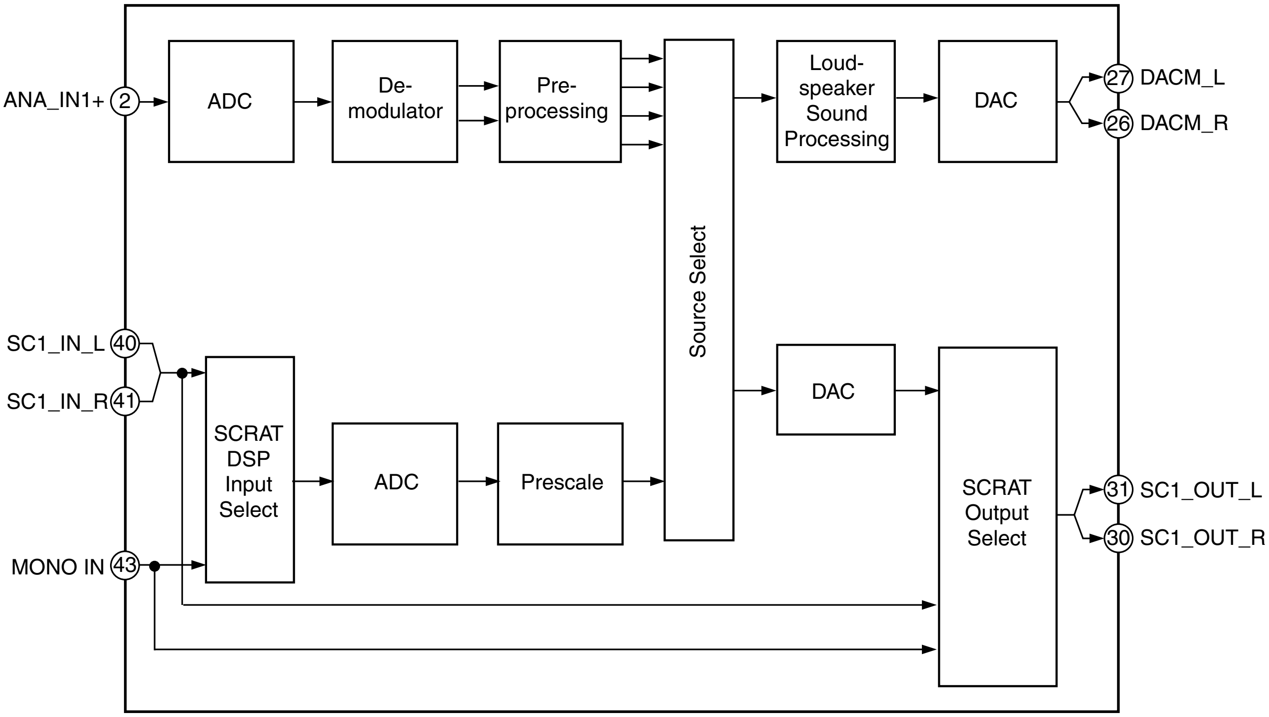
ANA_IN1+
2
ADC
De-
modulator
Pre-
processing
Source Select
Loud-
speaker
Sound
Processing
DAC
27
DACM_L
26
DACM_R
SC1_IN_L
40
SC1_IN_R
41
SCRAT
DSP
Input
Select
ADC
Prescale
DAC
SCRAT
Output
Select
31
SC1_OUT_L
30
SC1_OUT_R
MONO IN
43

● Pin Arrangement (Top view)

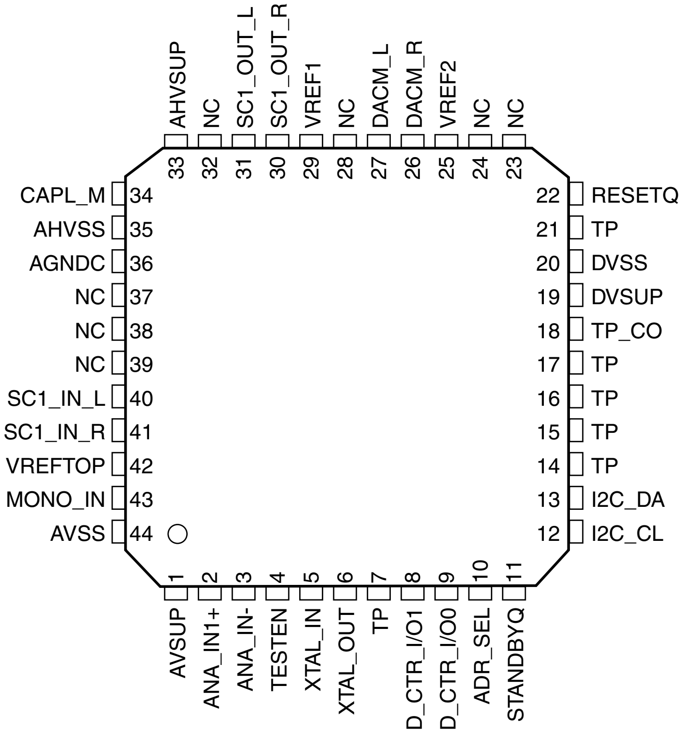
33 AHVSUP
32 NC
31 SC1_OUT_L
30 SC1_OUT_R
29 VREF1
28 NC
27 DACM_L
26 DACM_R
25 VREF2
24 NC
23 NC
CAPL_M 34
AHVSS 35
AGNDC 36
NC 37
NC 38
NC 39
SC1_IN_L 40
SC1_IN_R 41
VREFTOP 42
MONO_IN 43
AVSS 44
22 RESETQ
21 TP
20 DVSS
19 DVSUP
18 TP_CO
17 TP
16 TP
15 TP
14 TP
13 I2C_DA
12 I2C_CL
1 AVSUP
2 ANA_IN1+
3 ANA_IN-
4 TESTEN
5 XTAL_IN
6 XTAL_OUT
7 TP
8 D_CTR_I/O1
9 D_CTR_I/O0
10 ADR_SEL
11 STANDBYQ

● Pin Function

NC = Not connected; leave vacant
LV = if not used, leave vacant
DVSS: if not used, connect to DVSS
X = obligatory; connect as described in circuit diagram
AHVSS: connect to AHVSS

No.	Pin Name	Type	Connection (it not used)	Descriptiom
1	AVSUP		X	Analog power supply +5V
2	ANA_IN1+	IN	LV	IF input1
3	ANA_IN-	IN	LV	IF common
4	TESTEN	IN	X	Test pin
5	XTAL_IN	IN	X	Crystal oscillator
6	XTAL_OUT	OUT	X	Crystal oscillator
7	TP		LV	Test pin
8	D_CTR_I/O_1	IN/OUT	LV	D_CTR_I/O_1
9	D_CTR_I/O_0	IN/OUT	LV	D_CTR_I/O_0
10	ADR_SEL	IN	X	I2C Bus address select
11	STANDBYQ	IN	X	Standby (low-active)
12	I2C_CL	IN/OUT	X	I2C clock
13	I2C_DA	IN/OUT	X	I2C data
14	TP		LV	Test pin
15	TP		LV	Test pin
16	TP		LV	Test pin
17	TP		LV	Test pin
18	TP_CO	OUT	LV	Test pin
19	DVSUP		X	Digital power supply +5V
20	DVSS		X	Digital ground
21	TP		LV	Test pin
22	RESETQ	IN	X	Power-on-reset
23	NC		LV	Not connected
24	NC		LV	Not connected
25	VREF2		X	Reference ground 2 high-voltage part
26	DACM_R	OUT	LV	Loudspeaker out, right
27	DACM_L	OUT	LV	Loudspeaker out, left
28	NC		LV	Not connected
29	VREF1		X	Reference ground 1 high-voltage part
30	SC1_OUT_R	OUT	LV	SCRAT 1 output, right
31	SC1_OUT_L	OUT	LV	SCRAT 1 output, left
32	NC		LV	Not connected
33	AHVSUP		X	Analog power supply + 8.0 V
34	CAPL_M		X	Volume capacitor MAIN
35	AHVSS		X	Analog ground
36	AGNDC		X	Analog reference voltage high-voltage part
37	NC		LV	Not connected
38	NC		LV	Not connected
39	NC		LV	Not connected
40	SC1_IN_L	IN	LV	SCRAT 1 input, left
41	SC1_IN_R	IN	LV	SCRAT 1 input, right
42	VREFTOP		X	Reference voltage IF A/D converter
43	MONO_IN	IN	LV	Mono input
44	AVSS		X	Analog ground

■ MBM29LV160TE-90PFTN (AV BOARD ASSY : IC9101)

- 16Mbit Flash Memory

● Pin Arrangement (Top view)

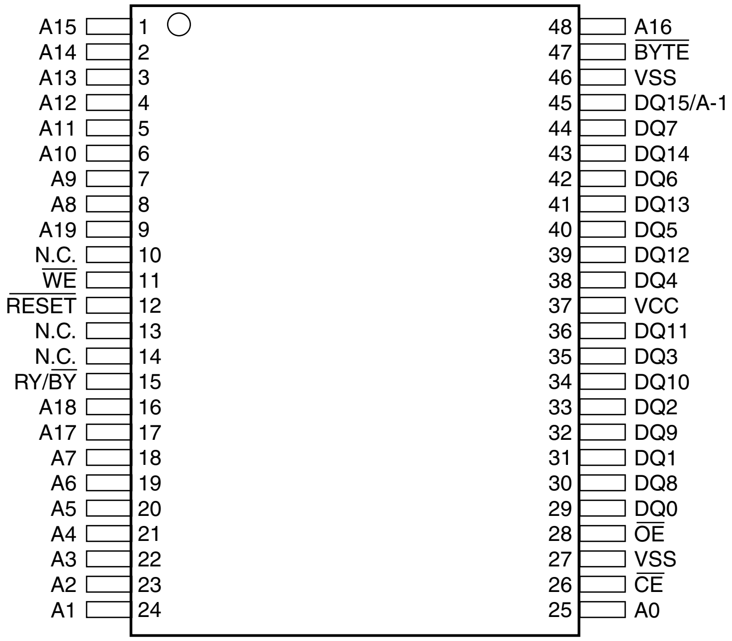
A15 1
A14 2
A13 3
A12 4
A11 5
A10 6
A9 7
A8 8
A19 9
N.C. 10
WE 11
RESET 12
N.C. 13
N.C. 14
RY/BY 15
A18 16
A17 17
A7 18
A6 19
A5 20
A4 21
A3 22
A2 23
A1 24
48 A16
47 BYTE
46 VSS
45 DQ15/A-1
44 DQ7
43 DQ14
42 DQ6
41 DQ13
40 DQ5
39 DQ12
38 DQ4
37 VCC
36 DQ11
35 DQ3
34 DQ10
33 DQ2
32 DQ9
31 DQ1
30 DQ8
29 DQ0
28 OE
27 VSS
26 CE
25 A0

● Block Diagram

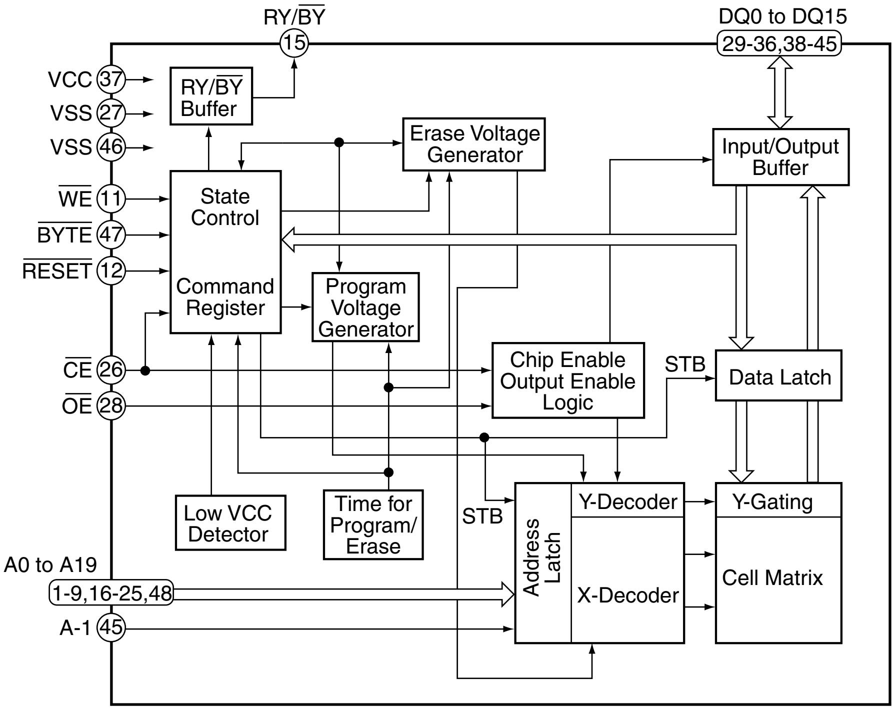
RY/BY
15
DQ0 to DQ15
29-36,38-45
VCC 37
VSS 27
VSS 46
WE 11
BYTE 47
RESET 12
CE 26
OE 28
A0 to A19
1-9,16-25,48
A-1 45
RY/BY Buffer
Erase Voltage Generator
Input/Output Buffer
State Control
Command Register
Program Voltage Generator
Chip Enable Output Enable Logic
STB
Data Latch
Low VCC Detector
Time for Program/ Erase
STB
Address Latch
Y-Decoder
X-Decoder
Y-Gating
Cell Matrix

● Pin Function

No.	Pin Name	I/O	Pin Function
1	A15	I	Address input
2	A14	I	Address input
3	A13	I	Address input
4	A12	I	Address input
5	A11	I	Address input
6	A10	I	Address input
7	A9	I	Address input
8	A8	I	Address input
9	A19	I	Address input
10	N.C.	–	Pin not connected internally
11	$\overline{\text{WE}}$	I	Write enable
12	$\overline{\text{RESET}}$	I	Hardware reset pin / Temporary sector unprotection
13	N.C.	–	Pin not connected internally
14	N.C.	–	Pin not connected internally
15	RY/$\overline{\text{BY}}$	O	Ready/Busy output
16	A18	I	Address input
17	A17	I	Address input
18	A7	I	Address input
19	A6	I	Address input
20	A5	I	Address input
21	A4	I	Address input
22	A3	I	Address input
23	A2	I	Address input
24	A1	I	Address input
25	A0	I	Address input
26	$\overline{\text{CE}}$	I	Chip enable
27	VSS	–	Ground
28	$\overline{\text{OE}}$	I	Output enable
29	DQ0	I/O	Data input/output
30	DQ8	I/O	Data input/output
31	DQ1	I/O	Data input/output
32	DQ9	I/O	Data input/output
33	DQ2	I/O	Data input/output
34	DQ10	I/O	Data input/output
35	DQ3	I/O	Data input/output
36	DQ11	I/O	Data input/output
37	VCC	–	Power supply
38	DQ4	I/O	Data input/output
39	DQ12	I/O	Data input/output
40	DQ5	I/O	Data input/output
41	DQ13	I/O	Data input/output
42	DQ6	I/O	Data input/output
43	DQ14	I/O	Data input/output
44	DQ7	I/O	Data input/output
45	DQ15/A-1	I/O	Data input/output
46	VSS	–	Ground
47	$\overline{\text{BYTE}}$	I	Selects 8-bit or 16-bit mode
48	A16	I	Address input

■ HY57V641620HGT-7 (AV BOARD ASSY : IC9104)

- 64M bit (4M × 16) Synchronous DRAM

● Block Diagram

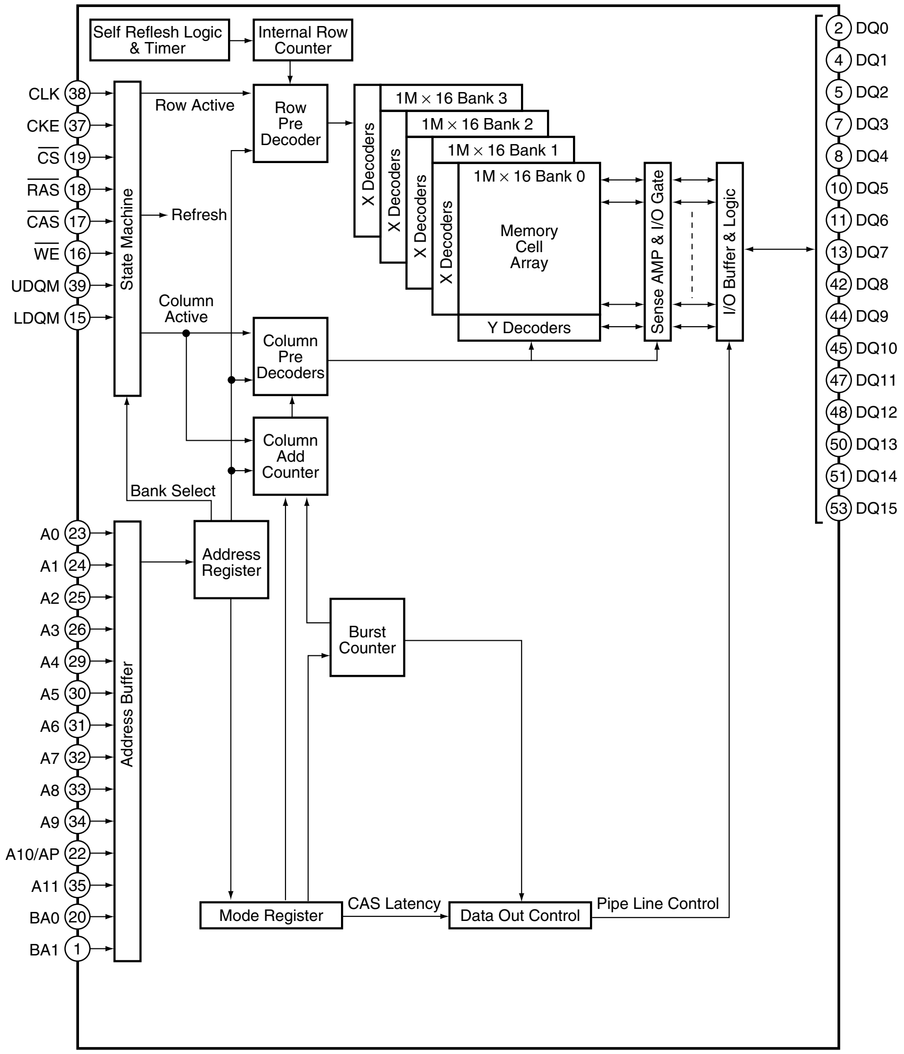
Self Reflesh Logic & Timer
Internal Row Counter
CLK 38
CKE 37
CS 19
RAS 18
CAS 17
WE 16
UDQM 39
LDQM 15
State Machine
Row Active
Refresh
Column Active
Row Pre Decoder
Column Pre Decoders
Column Add Counter
Bank Select
X Decoders
1M × 16 Bank 3
1M × 16 Bank 2
1M × 16 Bank 1
1M × 16 Bank 0
Memory Cell Array
Y Decoders
Sense AMP & I/O Gate
I/O Buffer & Logic
2 DQ0
4 DQ1
5 DQ2
7 DQ3
8 DQ4
10 DQ5
11 DQ6
13 DQ7
42 DQ8
44 DQ9
45 DQ10
47 DQ11
48 DQ12
50 DQ13
51 DQ14
53 DQ15
A0 23
A1 24
A2 25
A3 26
A4 29
A5 30
A6 31
A7 32
A8 33
A9 34
A10/AP 22
A11 35
BA0 20
BA1 1
Address Buffer
Address Register
Burst Counter
Mode Register
CAS Latency
Data Out Control
Pipe Line Control

Pin Function

No.	Pin Name	I/O	Pin Function	No.	Pin Name	I/O	Pin Function
1	VDD	–	Power supply	28	VSS	–	Ground
2	DQ0	I/O	Data input/output	29	A4	I	Address input
3	VDDQ	–	Power supply for output buffer	30	A5	I	Address input
4	DQ1	I/O	Data input/output	31	A6	I	Address input
5	DQ2	I/O	Data input/output	32	A7	I	Address input
6	VSSQ	–	Ground for output buffer	33	A8	I	Address input
7	DQ3	I/O	Data input/output	34	A9	I	Address input
8	DQ4	I/O	Data input/output	35	A11	I	Address input
9	VDDQ	–	Power supply for output buffer	36	NC	–	No connection
10	DQ5	I/O	Data input/output	37	CKE	I	Clock enable
11	DQ6	I/O	Data input/output	38	CLK	I	Clock input
12	VSSQ	–	Ground for output buffer	39	UDQM	I/O	Data input/output mask
13	DQ7	I/O	Data input/output	40	NC	–	No connection
14	VDD	–	Power supply	41	VSS	–	Ground
15	LDQM	I/O	Data input/output mask	42	DQ8	I/O	Data input/output
16	/WE	I	Write enable	43	VDDQ	–	Power supply for output buffer
17	/CAS	I	Column address strobe	44	DQ9	I/O	Data input/output
18	/RAS	I	Row address strobe	45	DQ10	I/O	Data input/output
19	/CS	I	Chip select	46	VSSQ	–	Ground for output buffer
20	BA0	I	Bank address input	47	DQ11	I/O	Data input/output
21	BA1	I	Bank address input	48	DQ12	I/O	Data input/output
22	A10/AP	I	Address input	49	VDDQ	–	Power supply for output buffer
23	A0	I	Address input	50	DQ13	I/O	Data input/output
24	A1	I	Address input	51	DQ14	I/O	Data input/output
25	A2	I	Address input	52	VSSQ	–	Ground for output buffer
26	A3	I	Address input	53	DQ15	I/O	Data input/output
27	VDD	–	Power supply	54	VSS	–	Ground

■ TDA9818TS (AV BOARD ASSY : IC7501)

• Single/multistandard VIF/SIF-PLL and FM-PLL/AM Demodulators

● Pin Arrangement (Top view)

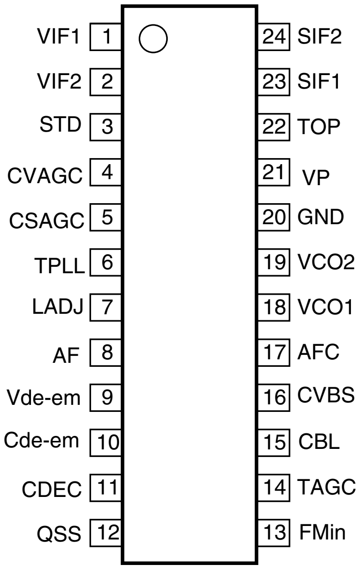
VIF1 1
VIF2 2
STD 3
CVAGC 4
CSAGC 5
TPLL 6
LADJ 7
AF 8
Vde-em 9
Cde-em 10
CDEC 11
QSS 12
24 SIF2
23 SIF1
22 TOP
21 VP
20 GND
19 VCO2
18 VCO1
17 AFC
16 CVBS
15 CBL
14 TAGC
13 FMin

● Pin Function

No.	Pin Name	Pin Function
1	VIF1	VIF differential input signal voltage 1
2	VIF2	VIF differential input signal voltage 2
3	STD	Standard selection switch
4	CVAGC	VIF AGC capacitor
5	CSAGC	SIF AGC capacitor
6	TPLL	PLL filter
7	LADJ	L/L accent switch and adjust
8	AF	Audio output
9	Vde-em	De-emphasis output
10	Cde-em	De-emphasis input
11	CDEC	Decoupling capacitor
12	QSS	Single reference QSS/intercarrier output voltage
13	FMin	Sound intercarrier input voltage
14	TAGC	Tuner AGC output
15	CBL	Black level detector
16	CVBS	Composite video output voltage
17	AFC	AFC output
18	VCO1	VCO1 resonance circuit
19	VCO2	VCO2 resonance circuit
20	GND	Ground
21	VP	Supply voltage
22	TOP	Tuner AGC takeover point adjust
23	SIF1	SIF differential input signal voltage 1
24	SIF2	SIF differential input signal voltage 2

● Block Diagram

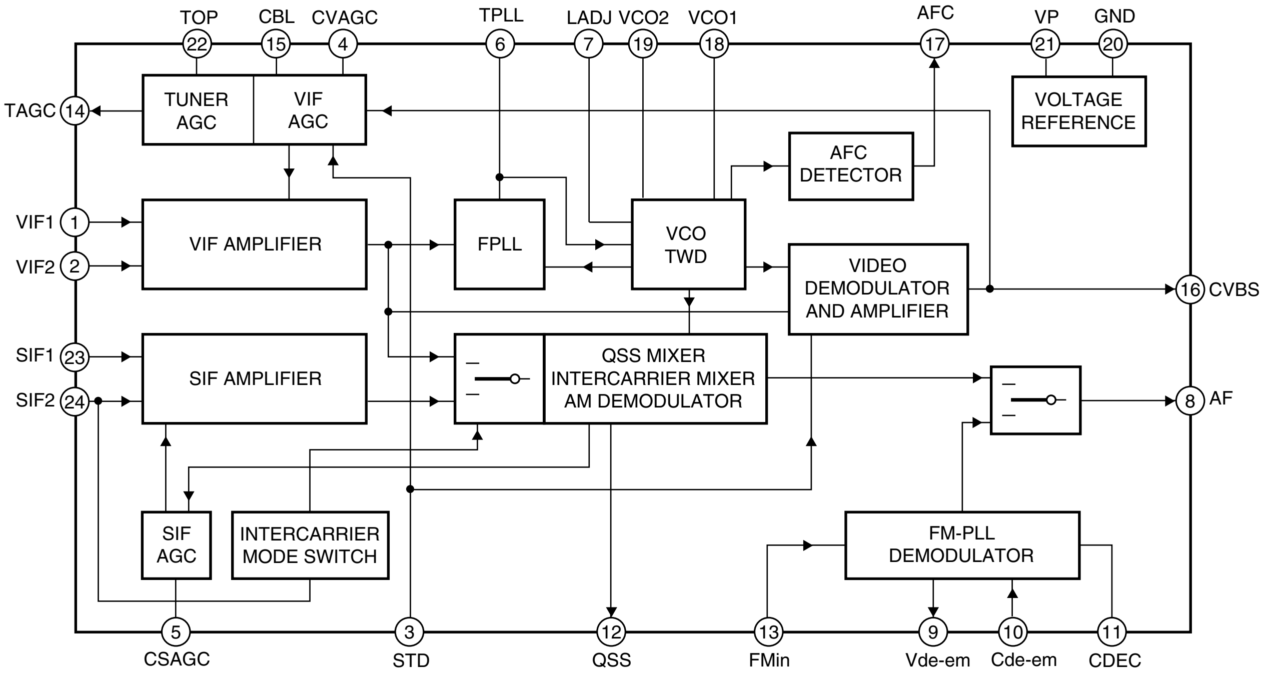
TOP 22
CBL 15
CVAGC 4
TPLL 6
LADJ 7
VCO2 19
VCO1 18
AFC 17
VP 21
GND 20
TAGC 14
TUNER AGC
VIF AGC
VOLTAGE REFERENCE
AFC DETECTOR
VIF1 1
VIF2 2
VIF AMPLIFIER
FPLL
VCO TWD
VIDEO DEMODULATOR AND AMPLIFIER
16 CVBS
SIF1 23
SIF2 24
SIF AMPLIFIER
QSS MIXER INTERCARRIER MIXER AM DEMODULATOR
8 AF
SIF AGC
INTERCARRIER MODE SWITCH
FM-PLL DEMODULATOR
5 CSAGC
3 STD
12 QSS
13 FMin
9 Vde-em
10 Cde-em
11 CDEC

■ TA1287FG (AV BOARD ASSY : IC8906)

• RGB to YUV/IQ High-speed Matrix IC

● Block Diagram

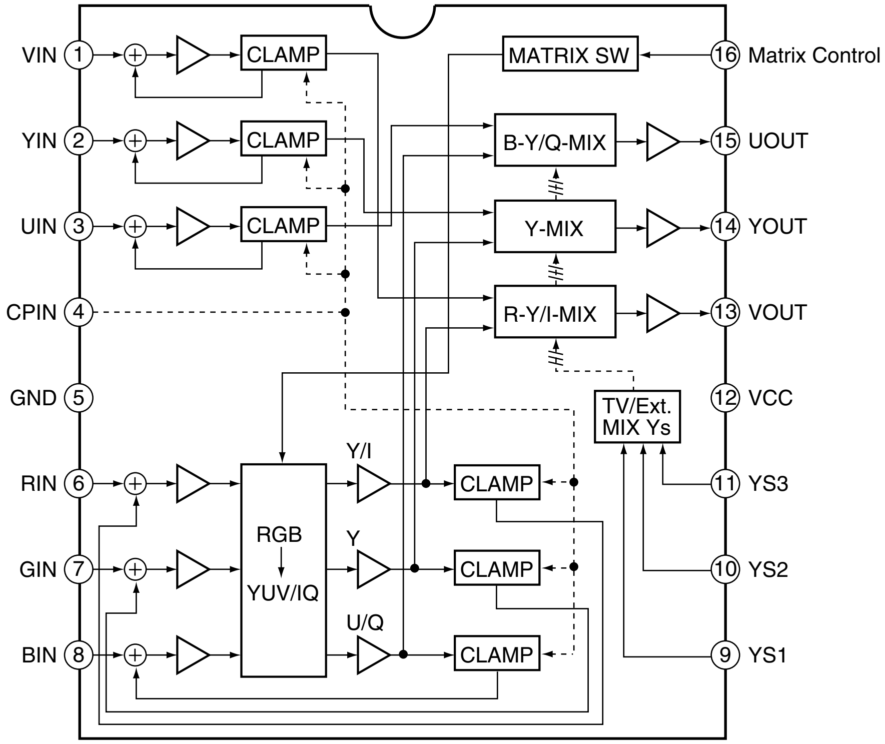
VIN 1
YIN 2
UIN 3
CPIN 4
GND 5
RIN 6
GIN 7
BIN 8
CLAMP
CLAMP
CLAMP
MATRIX SW
16 Matrix Control
B-Y/Q-MIX
15 UOUT
Y-MIX
14 YOUT
R-Y/I-MIX
13 VOUT
12 VCC
TV/Ext.
MIX Ys
Y/I
RGB
YUV/IQ
Y
U/Q
CLAMP
CLAMP
CLAMP
11 YS3
10 YS2
9 YS1

● Pin Function

No.	Pin Name	I/O	Pin Function
1	VIN	I	Input R-Y (V) or R signal through a clamping capacitor.
2	YIN	I	Input Y or G signal through a clamping capacitor.
3	UIN	I	Input B-Y (U) or B signal through a clamping capacitor.
4	CPIN	I	Input clamping pulse. Threshold: 0.75V
5	GND	–	Ground
6	RIN	I	Input R or R-Y (V) signal through a clamping capacitor.
7	GIN	I	Input G or Y signal through a clamping capacitor.
8	BIN	I	Input B or B-Y (U) signal through a clamping capacitor.
9	YS1	I	Select to switch mixing ratio. Threshold: 0.75V
10	YS2	I	Select to switch mixing ratio. Threshold: 0.75V
11	YS3	I	Select to switch mixing ratio. Threshold: 0.75V
12	VCC	–	Power supply 9V
13	VOUT	O	Output R-Y (V) or R signal.
14	YOUT	O	Output Y or G signal.
15	UOUT	O	Output B-Y (U) or B signal.
16	Matrix Control	I	This pin's voltage control the matrix coefficient for output signals. Selects the output mode.

■ AXF1119 (AV BOARD ASSY : U7501)

- TV Tuner

● Pin Arrangement

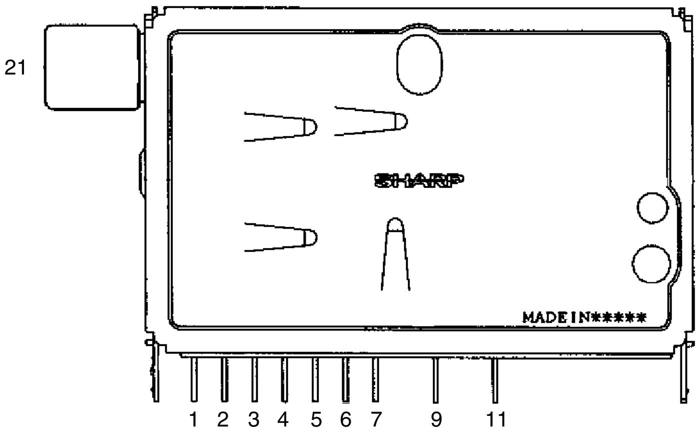
21
SHARP
MADE IN*****
1
2
3
4
5
6
7
9
11

● Pin Function

No.	Pin Name
1	AGC
2	BB (5V)
3	AS
4	SCL
5	SDA
6	NC
7	+B (5V)
8	-
9	BT (31V)
10	-
11	IF OUT
21	ANT IN

● Schematic Diagram

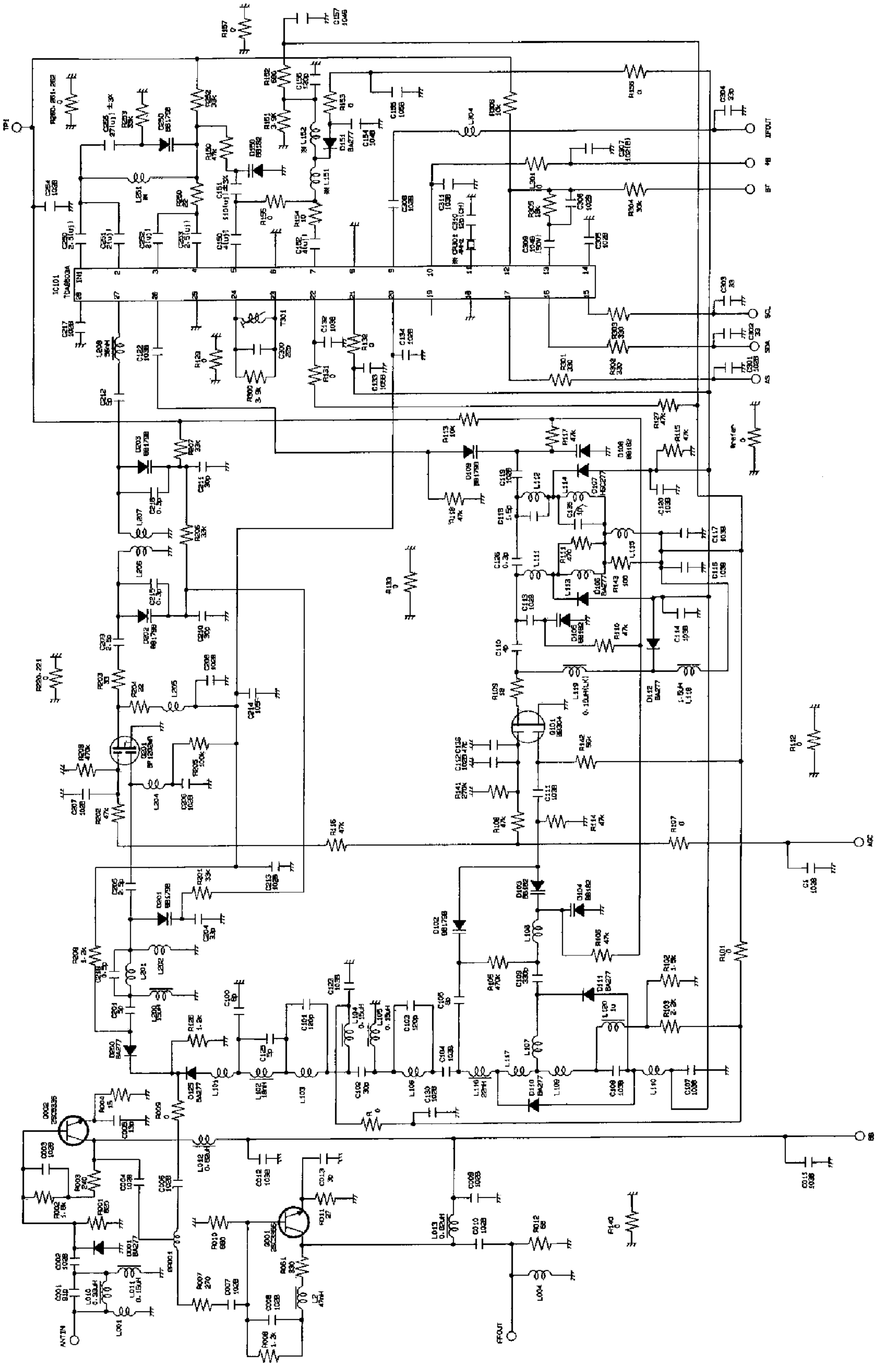

TP1
IC101
TDA9803A
IFOUT
RF
ST
SCL
SDA
AS
AGC
BB
ANTIN
FPOUT
T301
Q101
Q201
Q001
Q002

※ Bond fixed implementation parts(4 places)

■ AXY1066 (REG ASSY : U8502)

- DC-DC Converter Unit

● Pin Arrangement (Top view)

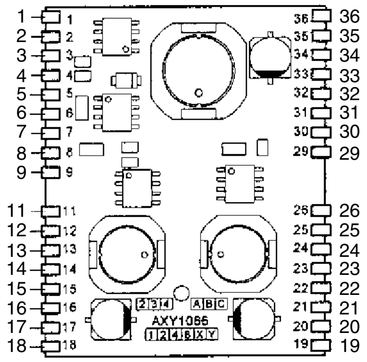
1
2
3
4
5
6
7
8
9
11
12
13
14
15
16
17
18
36
35
34
33
32
31
30
29
26
25
24
23
22
21
20
19
AXY1066
2 3 4
A B C
1 2 4 5 X Y

● Pin Function

No.	Pin Name	Pin Function	No.	Pin Name	Pin Function
1	Vin	12V input	19	Vo2	2.5V input
2	Vin	12V input	20	Vo2	2.5V input
3	Vin	12V input	21	Vo2	2.5V input
4	Vin	12V input	22	Vo2	2.5V input
5	ON/OFF	Output ON/OFF	23	N.C.	No connection
6	GND	Ground	24	GND	Ground
7	GND	Ground	25	GND	Ground
8	GND	Ground	26	GND	Ground
9	GND	Ground			
11	GND	Ground	29	GND	Ground
12	GND	Ground	30	GND	Ground
13	GND	Ground	31	GND	Ground
14	N.C.	No connection	32	N.C.	No connection
15	Vo3	1.5V output	33	Vo1	3.3V output
16	Vo3	1.5V output	34	Vo1	3.3V output
17	Vo3	1.5V output	35	Vo1	3.3V output
18	Vo3	1.5V output	36	Vo1	3.3V output

● Schematic Diagram

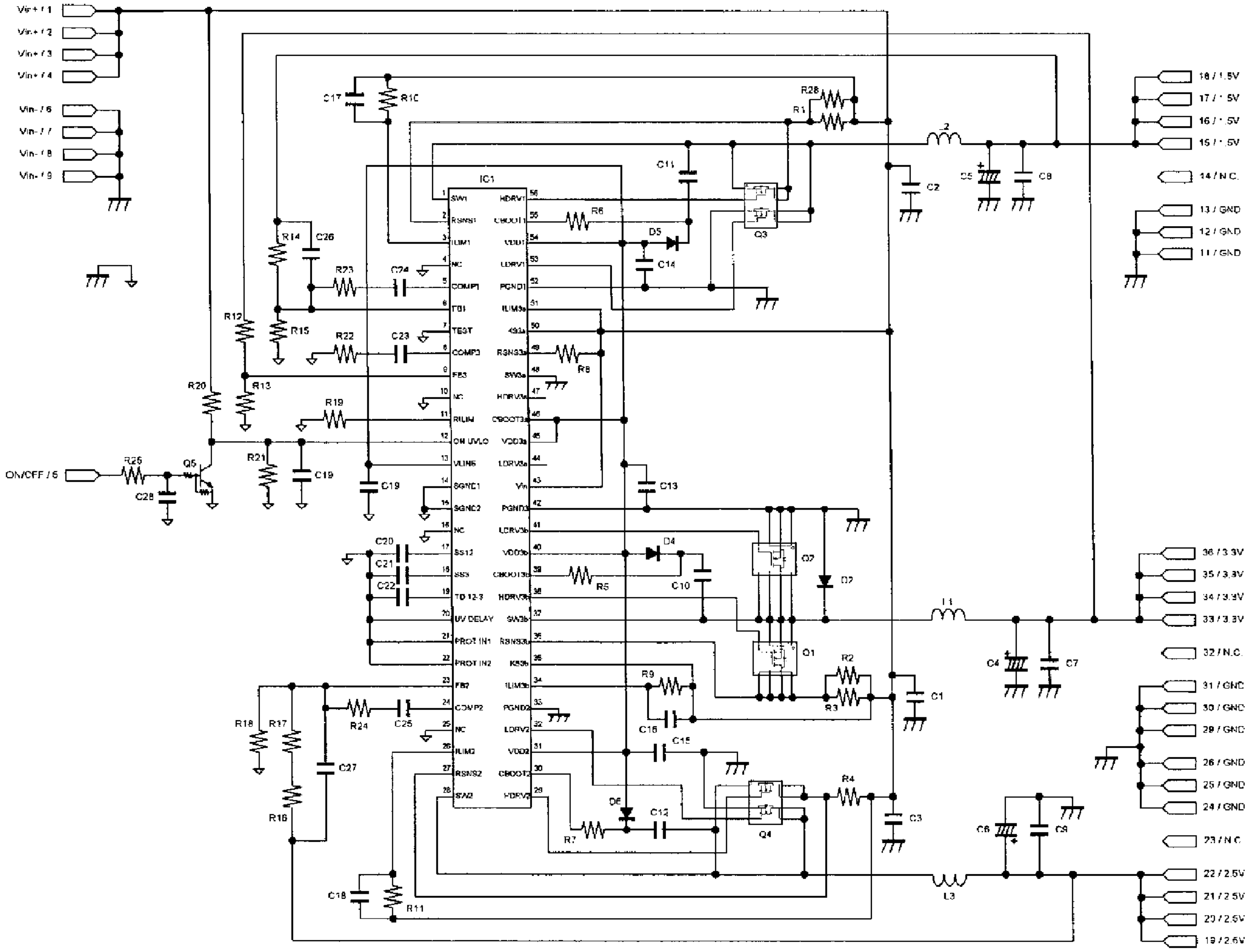
Vin+ / 1
Vin+ / 2
Vin+ / 3
Vin+ / 4
Vin- / 6
Vin- / 7
Vin- / 8
Vin- / 9
ON/OFF / 5
18 / 1.5V
17 / 1.5V
16 / 1.5V
15 / 1.5V
14 / N.C.
13 / GND
12 / GND
11 / GND
36 / 3.3V
35 / 3.3V
34 / 3.3V
33 / 3.3V
32 / N.C.
31 / GND
30 / GND
29 / GND
26 / GND
25 / GND
24 / GND
23 / N.C.
22 / 2.5V
21 / 2.5V
20 / 2.5V
19 / 2.5V
IC1
SW1
RSNS1
ILIM1
NC
COMP1
FB1
TEST
COMP3
FB3
NC
RILIM
ON UVLO
VLIN5
SGND1
SGND2
NC
SS12
SS3
TD 12-3
UV DELAY
PROT IN1
PROT IN2
FB2
COMP2
NC
ILIM2
RSNS2
SW2
HDRV1
CBOOT1
VDD1
LDRV1
PGND1
ILIM3a
KS3a
RSNS3a
SW3a
HDRV3a
CBOOT3a
VDD3a
LDRV3a
Vin
PGND3
LDRV3b
VDD3b
CBOOT3b
HDRV3b
SW3b
RSNS3b
KS3b
ILIM3b
PGND2
LDRV2
VDD2
CBOOT2
HDRV2
Q1
Q2
Q3
Q4
Q5
D2
D4
D5
D6
L1
L2
L3
C1
C2
C3
C4
C5
C6
C7
C8
C9
C10
C11
C12
C13
C14
C15
C16
C17
C18
C19
C20
C21
C22
C23
C24
C25
C26
C27
C28
R1
R2
R3
R4
R5
R6
R7
R8
R9
R10
R11
R12
R13
R14
R15
R16
R17
R18
R19
R20
R21
R22
R23
R24
R25
R28

■ AXY1070 (REG ASSY : U8510)

• DC-DC Converter Unit

● Pin Arrangement

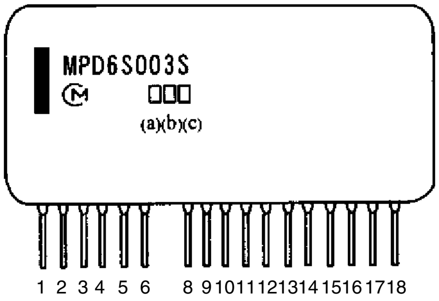
MPD6S003S
(a)(b)(c)
1 2 3 4 5 6 8 9 10 11 12 13 14 15 16 17 18

● Pin Function

No.	Pin Name	Pin Function
1	Vin	Voltage input
2	Vin	Voltage input
3	ON/OFF	Output ON/OFF
4	GND	Ground
5	GND	Ground
6	GND	Ground
8	GND	Ground
9	GND	Ground
10	N.C.	No connection
11	Vout	Voltage output
12	Vout	Voltage output
13	Vout	Voltage output
14	GND	Ground
15	VAR1	
16	VAR2	
17	N.C.	No connection
18	N.C.	No connection

● Schematic Diagram

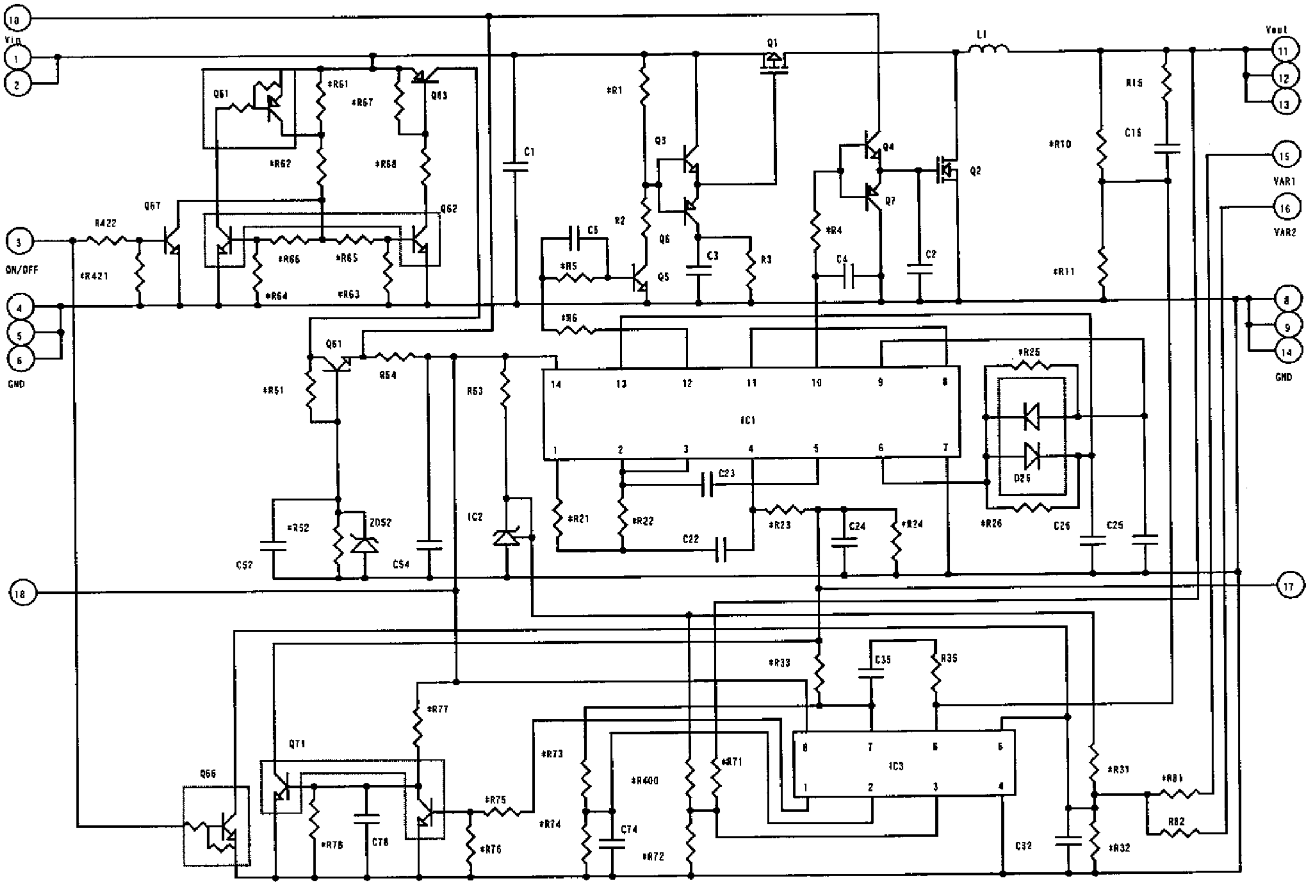
Vin
GND
ON/OFF
Vout
VAR1
VAR2
GND
Q1
Q2
Q3
Q4
Q5
Q6
Q7
Q61
Q62
Q63
Q66
Q67
Q71
L1
IC1
IC2
IC3
D25
ZD52
C1
C2
C3
C4
C5
C15
C22
C23
C24
C25
C26
C32
C35
C52
C54
C74
C78
R2
R3
R53
R54
R422
R15
R35
R81
R82
*R1
*R4
*R5
*R6
*R10
*R11
*R21
*R22
*R23
*R24
*R25
*R26
*R31
*R32
*R33
*R51
*R52
*R58
*R61
*R62
*R63
*R64
*R65
*R66
*R67
*R71
*R72
*R73
*R74
*R75
*R76
*R77
*R78
*R400
*R421

■ SDA6000 (AV BOARD ASSY : IC8904)

- Teletext Decoder

● Pin Arrangement (Top view)

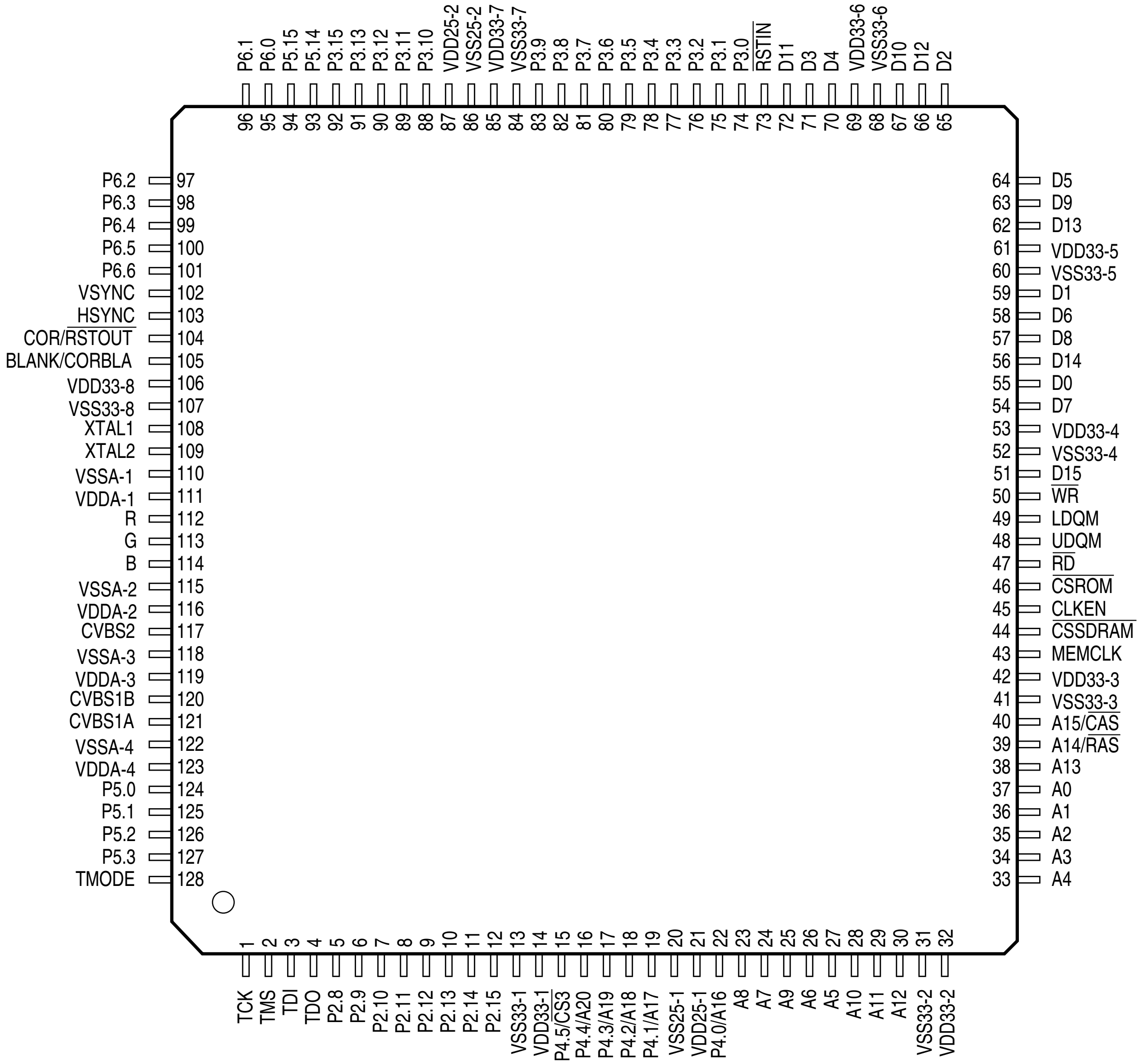

96 P6.1
95 P6.0
94 P5.15
93 P5.14
92 P3.15
91 P3.13
90 P3.12
89 P3.11
88 P3.10
87 VDD25-2
86 VSS25-2
85 VDD33-7
84 VSS33-7
83 P3.9
82 P3.8
81 P3.7
80 P3.6
79 P3.5
78 P3.4
77 P3.3
76 P3.2
75 P3.1
74 P3.0
73 RSTIN
72 D11
71 D3
70 D4
69 VDD33-6
68 VSS33-6
67 D10
66 D12
65 D2
97 P6.2
98 P6.3
99 P6.4
100 P6.5
101 P6.6
102 VSYNC
103 HSYNC
104 COR/RSTOUT
105 BLANK/CORBLA
106 VDD33-8
107 VSS33-8
108 XTAL1
109 XTAL2
110 VSSA-1
111 VDDA-1
112 R
113 G
114 B
115 VSSA-2
116 VDDA-2
117 CVBS2
118 VSSA-3
119 VDDA-3
120 CVBS1B
121 CVBS1A
122 VSSA-4
123 VDDA-4
124 P5.0
125 P5.1
126 P5.2
127 P5.3
128 TMODE
1 TCK
2 TMS
3 TDI
4 TDO
5 P2.8
6 P2.9
7 P2.10
8 P2.11
9 P2.12
10 P2.13
11 P2.14
12 P2.15
13 VSS33-1
14 VDD33-1
15 P4.5/CS3
16 P4.4/A20
17 P4.3/A19
18 P4.2/A18
19 P4.1/A17
20 VSS25-1
21 VDD25-1
22 P4.0/A16
23 A8
24 A7
25 A9
26 A6
27 A5
28 A10
29 A11
30 A12
31 VSS33-2
32 VDD33-2
64 D5
63 D9
62 D13
61 VDD33-5
60 VSS33-5
59 D1
58 D6
57 D8
56 D14
55 D0
54 D7
53 VDD33-4
52 VSS33-4
51 D15
50 WR
49 LDQM
48 UDQM
47 RD
46 CSROM
45 CLKEN
44 CSSDRAM
43 MEMCLK
42 VDD33-3
41 VSS33-3
40 A15/CAS
39 A14/RAS
38 A13
37 A0
36 A1
35 A2
34 A3
33 A4

● Block Diagram

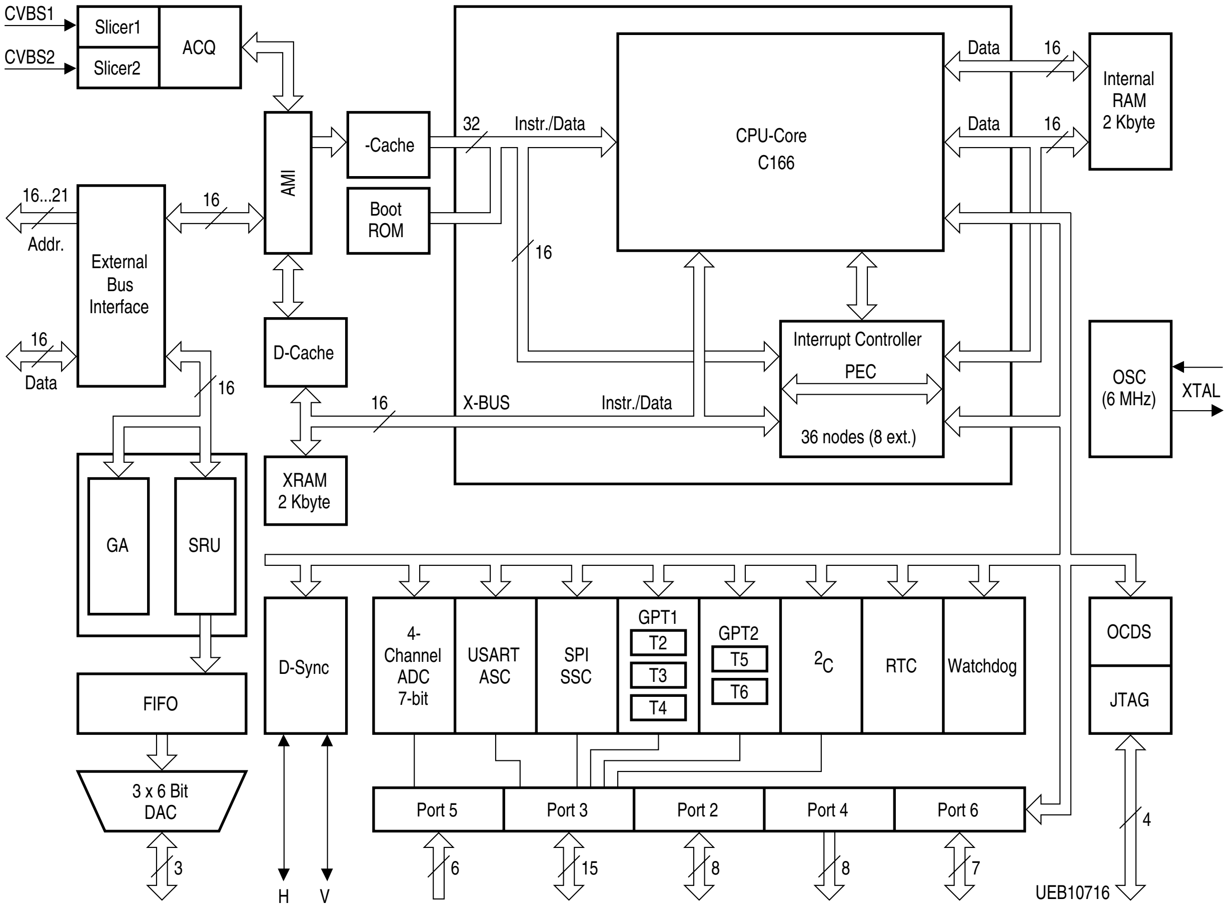
CVBS1
CVBS2
Slicer1
Slicer2
ACQ
AMI
-Cache
Boot ROM
32
Instr./Data
CPU-Core C166
Data
16
Data
16
Internal RAM 2 Kbyte
16...21
Addr.
16
External Bus Interface
16
Data
16
16
D-Cache
16
X-BUS
Instr./Data
Interrupt Controller
PEC
36 nodes (8 ext.)
OSC (6 MHz)
XTAL
XRAM 2 Kbyte
GA
SRU
FIFO
3 x 6 Bit DAC
3
D-Sync
H
V
4-Channel ADC 7-bit
USART ASC
SPI SSC
GPT1
T2
T3
T4
GPT2
T5
T6
2C
RTC
Watchdog
OCDS
JTAG
Port 5
Port 3
Port 2
Port 4
Port 6
6
15
8
8
7
4
UEB10716

● Pin Function

No.	Pin Name	Second Function	I/O	Pin Function
1	TCK	–	I	Clock for JTAG interface
2	TMS	–	I	Control signal for JTAG interface
3	TDI	–	I	Data input for JTAG interface
4	TDO	–	O	Data output for JTAG interface
5	P2.8	EX0IN	I/O	General purpose I/O port/External interrupt 0
6	P2.9	EX1IN	I/O	General purpose I/O port/External interrupt 1
7	P2.10	EX2IN	I/O	General purpose I/O port/External interrupt 2
8	P2.11	EX3IN	I/O	General purpose I/O port/External interrupt 3
9	P2.12	EX4IN	I/O	General purpose I/O port/External interrupt 4
10	P2.13	EX5IN	I/O	General purpose I/O port/External interrupt 5
11	P2.14	EX6IN	I/O	General purpose I/O port/External interrupt 6
12	P2.15	EX7IN	I/O	General purpose I/O port/External interrupt 7
13	VSS33-1	–	–	Digital ground for pads
14	VDD33-1	–	–	Digital power (for pads) (3.3 V)
15	P4.5	CS3	O	General purpose output port/Chip select signal for second external static memory
16	P4.4	A20	O	General purpose output port/Address bit
17	P4.3	A19	O	General purpose output port/Address bit
18	P4.2	A18	O	General purpose output port/Address bit
19	P4.1	A17	O	General purpose output port/Address bit
20	VSS25-1	–	–	Digital ground (for digital core)
21	VDD25-1	–	–	Digital power (for digital core) (2.5 V)
22	P4.0	A16	O	General purpose output port/Address bit
23	A8	R8	O	Address bit/SDRAM address bit
24	A7	R7/C7	O	Address bit/SDRAM address bit
25	A9	R9	O	Address bit/SDRAM address bit
26	A6	R6/C6	O	Address bit/SDRAM address bit
27	A5	R5/C5	O	Address bit/SDRAM address bit
28	A10	R10	O	Address bit/SDRAM address bit
29	A11	R11	O	Address bit/SDRAM address bit
30	A12	R12	O	Address bit/SDRAM address bit
31	VSS33-2	–	–	Digital ground for pads
32	VDD33-2	–	–	Digital power (for pads) (3.3 V)
33	A4	R4/C4	O	Address bit/SDRAM address bit
34	A3	R3/C3	O	Address bit/SDRAM address bit
35	A2	R2/C2	O	Address bit/SDRAM address bit
36	A1	R1/C1	O	Address bit/SDRAM address bit
37	A0	R0/C0	O	Address bit (All addresses are word addresses)/SDRAM Address bit
38	A13	R13	O	Address bit/SDRAM address bit
39	A14	$\overline{\text{RAS}}$	O	Address bit/Row address strobe for SDRAM access
40	A15	$\overline{\text{CAS}}$	O	Address bit/Column address strobe for SDRAM access
41	VSS33-3	–	–	Digital ground for pads
42	VDD33-3	–	–	Digital power (for pads) (3.3 V)
43	MEMCLK	–	O	Clock for SDRAM
44	$\overline{\text{CSSDRAM}}$	–	O	Chip select signal for SDRAM device
45	CLKEN	–	O	Enable for memory clock
46	$\overline{\text{CSROM}}$	–	O	Chip select signal for ROM device
47	$\overline{\text{RD}}$	–	O	External memory read strobe for ROM. $\overline{\text{RD}}$ is activated for every external instruction or data read access.
48	UDQM	–	O	Write disable for high byte
49	LDQM	–	O	Write disable for low byte
50	$\overline{\text{WR}}$	–	O	Memory write strobe

No.	Pin Name	Second Function	I/O	Pin Function
51	D15	–	I/O	Data bit
52	VSS33-4	–	–	Digital ground for pads
53	VDD33-4	–	–	Digital power (for pads) (3.3 V)
54	D7	–	I/O	Data bit
55	D0	–	I/O	Data bit
56	D14	–	I/O	Data bit
57	D8	–	I/O	Data bit
58	D6	–	I/O	Data bit
59	D1	–	I/O	Data bit
60	VSS33-5	–	–	Digital ground for pads
61	VDD33-5	–	–	Digital power (for pads) (3.3 V)
62	D13	–	I/O	Data bit
63	D9	–	I/O	Data bit
64	D5	–	I/O	Data bit
65	D2	–	I/O	Data bit
66	D12	–	I/O	Data bit
67	D10	–	I/O	Data bit
68	VSS33-6	–	–	Digital ground for pads
69	VDD33-6	–	–	Digital power (for pads) (3.3 V)
70	D4	–	I/O	Data bit
71	D3	–	I/O	Data bit
72	D11	–	I/O	Data bit
73	$\overline{\text{RSTIN}}$	–	I	Reset input pin
74	P3.0	SCL0	I/O	General purpose I/O port/I2C Bus clock line 0
75	P3.1	SDA0	I/O	General purpose I/O port/I2C Bus data line 0
76	P3.2	CAPIN	I/O	General purpose I/O port/GPT2 register CAPREL
77	P3.3	T3OUT	I/O	General purpose I/O port/GPT1 timer T3 toggle
78	P3.4	T3EUD	I/O	General purpose I/O port/GPT1 timer T3 ext. up/down
79	P3.5	T4IN	I/O	General purpose I/O port/GPT1 timer T4 input for count/gate/reload/capture
80	P3.6	T3IN	I/O	General purpose I/O port/GPT1 timer T3 count/gate input
81	P3.7	T2IN	I/O	General purpose I/O port/GPT1 timer T2 input for count/gate/reload/capture
82	P3.8	MRST	I/O	General purpose I/O port/SSC masterreceiver/slave-transmit I/O
83	P3.9	MTSR	I/O	General purpose I/O port/SSC mastertransmit/slave-receiver O/I
84	VSS33-7	–	–	Digital ground for pads
85	VDD33-7	–	–	Digital power (for pads) (3.3 V)
86	VSS25-2	–	–	Digital ground (for digital core)
87	VDD25-2	–	–	Digital power (for digital core) (2.5 V)
88	P3.10	TxD0	I/O	General purpose I/O port/ASC0 clock/data output
89	P3.11	RxD0	I/O	General purpose I/O port/ASC0 data input (asynchronous) or I/O (synchronous).
90	P3.12	–	I/O	General purpose I/O port
91	P3.13	SCLK	I/O	General purpose I/O port/SSC master clock output/slave clock input
92	P3.15	–	I/O	General purpose I/O port
93	P5.14	T4EUD	I/O	General purpose Input port/GPT1 timer T4 ext.up/down ctrl. input
94	P5.15	T2EUD	I/O	General purpose Input port/GPT1 timer T2 ext.up/down ctrl. input
95	P6.0	TRIG_IN	I/O	General purpose I/O port/Trigger input-signal for 'On Chip Debug System' (OCDS)
96	P6.1	TRIG_OUT	I/O	General purpose I/O port/Trigger outputsignal for 'On Chip Debug System' (OCDS)
97	P6.2	FIELD	I/O	General purpose I/O port/Field signal of field detection
98	P6.3	SCL1	I/O	General purpose I/O port/I2C bus clock line 1
99	P6.4	SDA1	I/O	General purpose I/O port/I2C bus data line 1
100	P6.5	–	I/O	General purpose I/O port

No.	Pin Name	Second Function	I/O	Pin Function
101	P6.6	SDA2	I/O	General purpose I/O port/I2C bus data line 2
102	VSYNC	VCS	I/O	Vertical sync In/output/Composite sync output
103	HSYNC	–	I/O	Horizontal sync In/output
104	COR	RSTOUT	O	Output for contrast reduction/Reset output
105	BLANK	CORBLA	O	Fast blanking signal/Three-level signal for contrast reduction + fast blanking
106	VDD33-8	–	–	Digital power (for pads) (3.3 V)
107	VSS33-8	–	–	Digital ground for pads
108	XTAL1	–	I	Input of the oscillator amplifier circuit
109	XTAL2	–	O	Output of the oscillator amplifier circuit
110	VSSA-1	–	–	Analog ground
111	VDDA-1	–	–	Analog power (for PLL and DAC) (2.5 V)
112	R	–	O	Analog output for red channel
113	G	–	O	Analog output for green channel
114	B	–	O	Analog output for blue channel
115	VSSA-2	–	–	Analog ground
116	VDDA-2	–	–	Analog power (for ADCs) (2.5 V)
117	CVBS2	–	I	CVBS signal inputs for WSS data slicing
118	VSSA-3	–	–	Analog ground
119	VDDA-3	–	–	Analog power (for ADCs) (2.5 V)
120	CVBS1B	–	I	Ground for CVBS1A (differential input)
121	CVBS1A	–	I	CVBS signal inputs for full service data slicing
122	VSSA-4	–	–	Analog ground
123	VDDA-4	–	–	Analog power (for ADCs) (2.5 V)
124	P5.0	AN.0	I	General purpose Input port/Analog input for A/D-converter
125	P5.1	AN.1	I	General purpose Input port/Analog input for A/D-converter
126	P5.2	AN.2	I	General purpose Input port/Analog input for A/D-converter
127	P5.3	AN.3	I	General purpose Input port/Analog input for A/D-converter
128	TMODE	–	I	Test mode pin

7.4 CLEANING

Before shipping out the product, be sure to clean the following positions by using the prescribed cleaning tools:

Position to be cleaned	Cleaning tools
Fans	Cleaning paper : GED-008

8. PANEL FACILITIES

Media Receiver

Front view

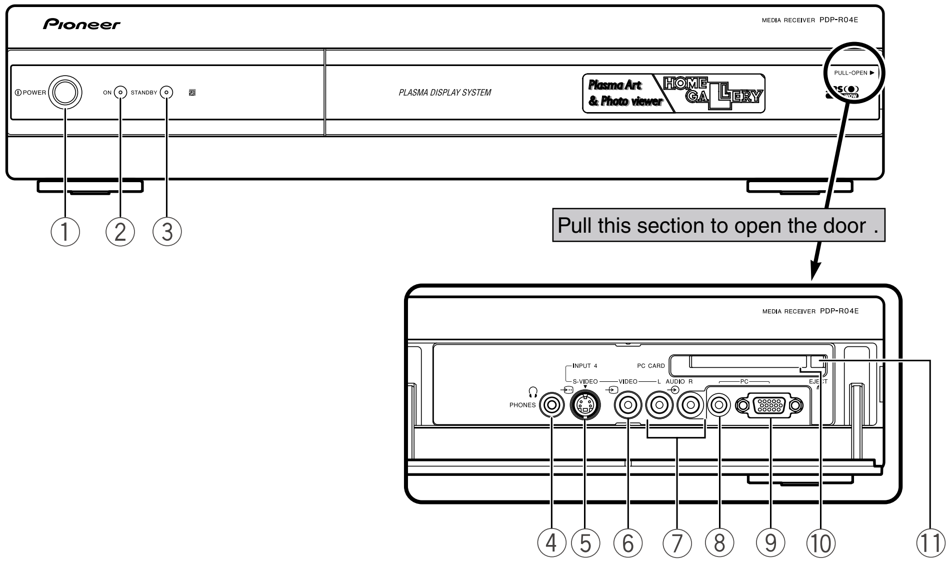
Pioneer
MEDIA RECEIVER PDP-R04E
POWER
ON
STANDBY
PLASMA DISPLAY SYSTEM
Plasma Art & Photo viewer
HOME GALLERY
PULL-OPEN ►
Pull this section to open the door .
INPUT 4
PC CARD
S-VIDEO
VIDEO
L AUDIO R
PC
EJECT
PHONES
① ② ③
④ ⑤ ⑥ ⑦ ⑧ ⑨ ⑩ ⑪

① POWER button
② POWER ON indicator
③ STANDBY indicator
④ PHONES output terminal
⑤ INPUT 4 terminal (S-VIDEO)
⑥ INPUT 4 terminal (VIDEO)
⑦ INPUT 4 terminals (AUDIO)
⑧ PC INPUT terminal (AUDIO)
⑨ PC INPUT terminal (ANALOG RGB)
⑩ PC CARD slot
⑪ PC CARD eject button

Rear view

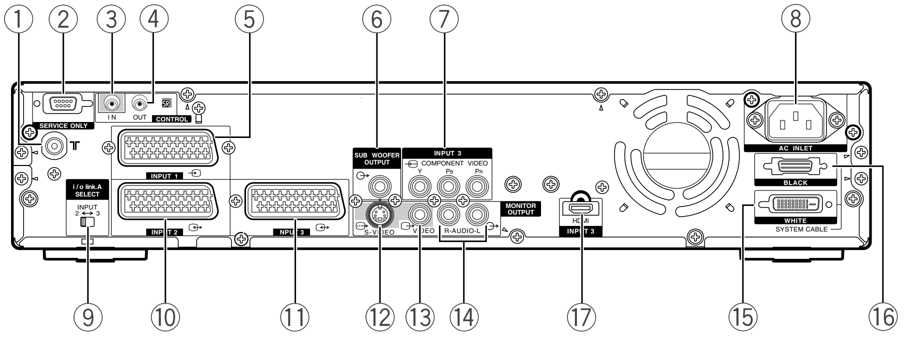
① ② ③ ④ ⑤ ⑥ ⑦ ⑧
SERVICE ONLY
IN
OUT
CONTROL
INPUT 1
i/o link.A SELECT
INPUT 2 ↔ 3
INPUT 2
INPUT 3
SUB WOOFER OUTPUT
INPUT 3
COMPONENT VIDEO
Y PB PR
MONITOR OUTPUT
S-VIDEO
VIDEO
R-AUDIO-L
HDMI
INPUT 3
AC INLET
BLACK
WHITE
SYSTEM CABLE
⑨ ⑩ ⑪ ⑫ ⑬ ⑭ ⑰ ⑮ ⑯

① Antenna input terminal
② RS-232C terminal (used in the factory setup)
③ Control input terminal
④ Control output terminal
⑤ INPUT 1 terminal (SCART)
⑥ SUB WOOFER OUTPUT terminal
⑦ INPUT 3 COMPONENT VIDEO terminals (Y, PB, PR)
⑧ AC INLET terminal
⑨ i/o link.A SELECT switch
⑩ INPUT 2 terminal (SCART)
⑪ INPUT 3 terminal (SCART)
⑫ MONITOR OUT terminal (S-VIDEO)
⑬ MONITOR OUT terminal (VIDEO)
⑭ MONITOR OUT terminals (AUDIO)
⑮ SYSTEM CABLE terminal (WHITE)
⑯ SYSTEM CABLE terminal (BLACK)
⑰ INPUT 3 HDMI terminal

Remote control unit

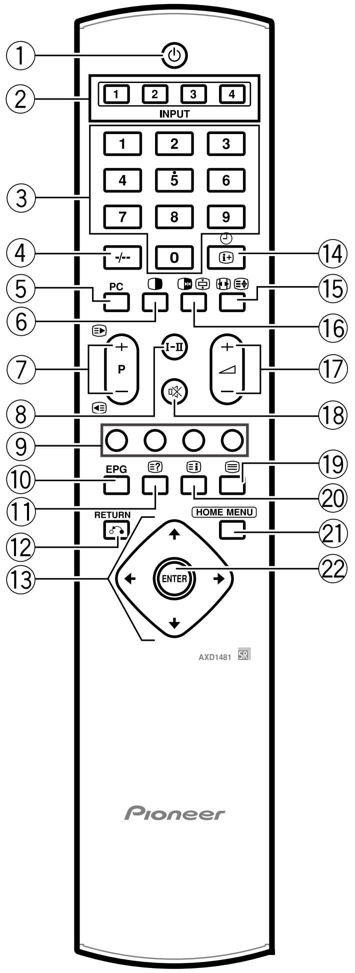

① ⏻

Places the system into the standby mode.

② INPUT 1, 2, 3, 4

Selects an input source.

③ 0 – 9

Switches on the power to the Plasma Display.

TV/External input mode: Selects a channel.

TELETEXT mode: Selects a page.

④ -/--

Selects the two digit mode.

⑤ PC

Selects the PC terminal as an input source.

⑥ ◨

Switches the screen mode among 2-screen, picture-in-picture, and single-screen.

⑦ P +/P –

TV/External input mode: Selects a channel.

≡▸/◂≡

TELETEXT mode: Selects a page.

⑧ I-II

Sets the sound multiplex mode.

⑨ Colour (RED/GREEN/YELLOW/BLUE)

TELETEXT mode: Selects a page.

⑩ EPG

Displays the Electronic Programme Guide.

⑪ ≡?

TELETEXT mode: Displays hidden characters.

⑫ ↶ (RETURN)

Restores the previous menu screen.

⑬ ↑/↓/←/→

Selects a desired item on the setting screen.

⑭ i+ ◷

Displays the channel information.

⑮ ◂▸

TV/External input mode: Changes the wide screen size.

≡⇕

TELETEXT mode: Switches Teletext images. (full/upper half/lower half)

⑯ ⏯

Freezes a frame from a moving image. Press again to cancel the function.

⊟

TELETEXT mode: Stops updating Teletext pages. Press again to release the hold mode.

⑰ ⊿ +/ ⊿ –

Sets the volume.

⑱ 🔇

Mutes the sound.

⑲ ≡

Selects the TELETEXT mode.
(all TV image, all TEXT image, TV/TEXT image)

⑳ ≡i

TELETEXT mode: Displays an Index page for the CEEFAX/FLOF format. Displays a TOP Over View page for the TOP format.

㉑ HOME MENU

TV/External Input mode: Displays the Menu screen.

㉒ ENTER

Executes a command.

NOTE

- When using the remote control unit, point it at the Plasma Display.